STATE OF TENNESSEE
DEPARTMENT OF ENVIRONMENT AND CONSERVATION
DIVISION OF WATER RESOURCES
William R. Snodgrass - Tennessee Tower
312 Rosa L. Parks Avenue, 11th Floor
Nashville, Tennessee 37243-1102

May 15, 2017

Mr. Neal Hall, P. E.
Senior Project Manager
CTI Engineers, Inc.
e-copy: nhall@ctiengr.com
3354 Perimeter Hill Drive, Suite 140
Nashville, TN 37211

Subject: **City of LaVergne**
County: Rutherford
Wastewater Project Number: 17.0286
Project: Stadard Sewer Specifications-City of LaVergne

Dear Mr. Hall:

The Tennessee Department of Environment and Conservation, Division of Water Resources, acknowledges the receipt of 5 sets of documents on May 1, 2017.

Review of these standard sanitary sewer specifications shows that they are in conformance with our guidelines. Therefore, they have been stamped "APPROVED". This approval will remain in effect until May 15, 2022.

We are returning 4 copies to you and retaining one copy for our files. To expedite matters, please reference the assigned wastewater project number 17.0286 on any future correspondence. If we may be of any assistance, please feel free to contact Mr. Mahendra Upadhyaya at (615) 253-3399 or by E-mail at *Mahendra.Upadhyaya@tn.gov*.

Sincerely,

Vojin Janjić
Manager, Water-Based Systems

cc: Water-Based Systems File
Ms. April Vann Grippo, Unit Manager, TDEC Division of Water Resources, April.Grippo@tn.gov
Mr. Michael Dietz, Interim Utilities Manager, City of LaVergne, mdietz@lavergnetn.gov

STANDARD SEWER SPECIFICATIONS AND DETAILS

CITY OF LA VERGNE, TENNESSEE

APPROVED FOR CONSTRUCTION
THE DOCUMENT BEARING THIS STAMP HAS BEEN RECEIVED AND REVIEWED BY THE
TENNESSEE DEPARTMENT OF ENVIRONMENT AND CONSERVATION
DIVISION OF WATER RESOURCES
AND IS HEREBY APPROVED FOR CONSTRUCTION BY THE COMMISSIONER

MAY 15 2017

THIS APPROVAL IS VALID FOR ONE YEAR
THE APPROVAL SHALL NOT BE CONSTRUED AS CREATING A PRESUMPTION OF CORRECT OPERATION OR AS WARRANTING BY THE COMMISSIONER THAT THE APPROVED FACILITIES WILL REACH THE DESIGN GOAL FOR THE COMMISSIONER
BY TITLE

RECEIVED
MAY 01 2017
TN DEPT. OF ENVIRONMENT AND CONSERVATION
DIVISION OF WATER RESOURCES

APPROVAL EXPIRES
MAY 15 2022
TENN DEPT OF ENVIRONMENT & CONSERVATION
DIVISION OF WATER RESOURCES

CITY OF LA VERGNE, TENNESSEE
5093 Murfreesboro Road
La Vergne, Tennessee 37086
(615) 793-6295

WPN17 0286

CTI Engineers, Inc.
3354 Perimeter Hill Drive, Suite 140
Nashville, Tennessee
615.834.8300
CTI Project 00080-07

CITY OF LA VERGNE, TENNESSEE

STANDARD SEWER SPECIFICATIONS AND DETAILS

JANUARY 2017

CITY OF LA VERGNE, TENNESSEE

City Hall
5093 Murfreesboro Road
La Vergne, Tennessee 37086
(615)793-6295

Public Works Department
148 International Boulevard
La Vergne, Tennessee 37086
(615)793-9891

Prepared By

CTI Engineers, Inc.
3354 Permeter Hill Drive, Suite 140
Nashville, Tennessee 37211
CTI Project 00080-07

TABLE OF CONTENTS

		Page
	INTRODUCTION	**i**
1.0	**GENERAL INFORMATION**	1
1.1	Definitions	1
1.2	Scope of Regulations	1
1.3	Plan Review Procedure	1
1.4	Gravity Sewer Design Basis	3
1.5	Wastewater Lift Station Design Basis	6
1.6	Force Main Design Basis	6
1.7	Pressure Sewers and Grinder Pump Design Basis	7
1.8	Permits	7
1.9	Notification of Construction	7
1.10	Inspection	8
1.11	Final Acceptance	9
1.12	Execution	9
1.13	Standards Flexibility	9
2.0	**PRODUCTS AND MATERIALS**	**10**
2.1	Backfill	10
2.2	Concrete	10
2.3	Sewer Manholes and Covers	11
2.4	Pipe	15
2.5	Check Dams	19
2.6	Vent Pipes	19
2.7	Pipeline Detection Tape	19
2.8	Sewer Service Connections	19
2.9	Wastewater Lift Stations	20
2.10	Valves	21
3.0	**EXECUTION**	**22**
3.1	Earthwork	22
3.2	Slope Protection and Erosion Control	23
3.3	Dewatering	23
3.4	Sheeting, Shoring, and Bracing	24
3.5	Excavation	24
3.6	Drilling and Blasting	26
3.7	Pipe Laying	26
3.8	Backfilling	28
3.9	Manholes	29
3.10	Disposal of Waste and Unsuitable Materials	30

TABLE OF CONTENTS (Continued)

		Page
3.11	Inspection and Testing	30
3.12	Final Grading	34
3.13	Topsoil	34
3.14	Settlement	34

APPENDIX – STANDARD SEWER DETAILS

1.0 Typical Gravity Sewer Installation
2.0 Sanitary Sewer Laterals
3.0 Precast Concrete Manhole
4.0 Standard Precast Manhole for Depth of Less than 5’-0”
5.0 Precast Concrete Drop Manhole
6.0 Resilient Boot Connection for Sewer Pipe to Manhole Detail
7.0 Typical Manhole Vent
8.0 Detail of Mastic/Plastic Gasket for Precast Manhole Sections
9.0 Concrete Protection for Sewer Lines
10.0 Manhole Frame and Cover
11.0 Concrete Check Dam
12.0 Cleanout with Traffic Box
13.0 Cleanout with Non-Traffic Box
14.0 Concrete Anchors
15.0 Typical Trench Backfill
16.0 PVC Pipe Installation detail
17.0 Typical Gravity Sewer Installation
18.0 Sewage Air Release Valve
19.0 Typical Pressure Sewer Service Line Connection
20.0 Pressure Sewer Cleanout Traffic Box
21.0 Pressure Sewer Cleanout Non-Traffic Box

INTRODUCTION

The purpose of these Standard Sewer Specifications and Details is to provide engineers, contractors, developers, and others with the requirements of the City of La Vergne (City) that are to be incorporated into the design and construction of sanitary sewer lines, pumping stations, force mains or other appurtenances which will be connected to and/or dedicated to the City of La Vergne for the purpose of providing public sewage service.

The design and construction of all sanitary sewage treatment and conveyance works must conform to the latest edition of the "Design Criteria for Sewage Works" of the Tennessee Department of Environment and Conservation (TDEC) and any more stringent requirements of the City of La Vergne.

No sanitary sewers shall be constructed in La Vergne until the design is approved by both the City of La Vergne and the Tennessee Department of Environment and Conservation.

It is the intention of these Standard Sewer Specifications and Details to meet or exceed the "Design Criteria for Sewage Works". These Standard Sewer Specifications and Details are subject to change. Therefore, it is best to contact the City to insure that these are the most current specifications. Failure to comply with the most current Standard Sewer Specifications and Details shall not prevent the City from requiring a correction in the design or construction of the sewers.

The Terms used in these Standard Sewer Specifications and Details shall have the same meanings as defined in the "Design Criteria for Sewage Works". Where these Standard Sewer Specifications and Details refer to the "City" and to terms such as "approved by, acceptable to, requested by the City," and other like terms, "City" shall mean the City Engineer of La Vergne or authorized representative.

Detailed plans and specifications for any special conditions, structures, or methods that are not covered by these Standard Sewer Specifications and Details shall be submitted to the City for approval along with other plans, profiles, details, and specifications required by the City.

The design and construction of public sewer extensions shall comply with all applicable Federal, State, and local laws and regulations.

1.0 GENERAL

1.1 Definitions

1.1.1 Public Works - City of La Vergne, Tennessee, Department of Public Works, which oversees inspection and approval of construction of all proposed sewer improvements.

1.1.2 City - City of La Vergne, Rutherford County, Tennessee.

1.1.3 City Engineer - Employed by the City of La Vergne, Registered Professional Engineer in Tennessee and is responsible for review and approval of all proposed sewer improvements.

1.1.4 Planning Commission - City of La Vergne Planning Commission.

1.1.5 Developer - Person, firm, or business developing property and/or Owner of a proposed development in which sewer lines are to be located.

1.1.6 Contractor - Contractor who is installing sewer lines in a proposed development.

1.1.7 Design Engineer - One who has prepared the construction plans and specifications for the installation of sewer lines in a proposed development. As provided by the laws of Tennessee, he or she must be a registered professional engineer and plans and specifications must bear his or her official seal, signature, and date.

1.1.8 TDEC - Tennessee Department of Environment and Conservation; Division of Water Resources.

1.2 Scope of Regulations

These regulations shall apply to any person, developer, firm, business, or entity interested in and desiring to construct additional sewer lines or to extend sewer lines within the City limits, or to construct sewer lines or extend sewer lines in a way that affects the sewer service provided by the City.

1.3 Plan Review Procedure

1.3.1 Before any sewer expansion or connection is made to a sewer line of the City, the Developer or other party through the design engineer shall submit and receive approval of the proposed plans.

1.3.2 The approval of the City Engineer must be obtained before submittal of the plans and specifications to TDEC. Both approvals must be obtained before construction is started. Evidence of TDEC approval must be furnished to the City Engineer and to Public Works before beginning construction. A copy of the City and TDEC approved plans must be present at the project site during construction.

1.3.3 Approval of plans and specifications shall be valid for one (1) year from the date of approval.

1.3.4 Plan submittal procedure shall be as follows:

a) All plans shall be submitted to the City Engineer with a letter of transmittal. Six (6) complete sets of sewer plans and specifications shall be submitted.

b) The City Engineer will review the plans. Should the proposed plans need corrections, they will be returned with comments to the Design Engineer for applicable changes.

c) Once the proposed sewer plan meets the City of La Vergne's current requirements, five (5) stamped and signed copies, as to approval, will be returned to the Design Engineer or Developer for submittal to TDEC.

1.3.5 Plan details shall include the following:

a) Each plan sheet shall bear an appropriate title block showing the name of the project, location, owner, design engineer, scale in feet, true north, sheet number and revision data.

b) Each sheet shall contain a blank area at least 4-inches by 6- inches near the title block for imprinting the official "Approved for Construction" stamps of TDEC and the City of La Vergne. Plans shall be clear and legible and shall conform to the requirements of the City.

c) Plans should be black line on sheets 24 inches x 36 inches.

d) The plans shall show the location, size and direction of flow of all existing and proposed sewers. Hydraulic calculations are required for all lines in a project. Calculations shall include, as a minimum, number of services per line segment, estimated flow per line segment, proposed slope, calculated velocity, calculated pipe capacity, length of line segment, and “n” factor.

e) Plans and profiles are required for all sewer lines and force mains. Profiles should have a horizontal scale of not more than fifty feet to the inch. The vertical scale of profiles shall not be more than ten feet to the inch. The plan view and profile should be drawn to corresponding horizontal scales. Plans and profiles shall be drawn on the same sheet and shall show:

1. Line of ground surface; location and description of survey benchmarks; size, material and type of pipe for the main and service lines; service connections; length between manholes; invert and surface elevation at each manhole, and grade of sewer between each two adjacent manholes. All manholes shall be numbered on the plans and correspondingly numbered on the profiles. Stationing of the sewer line at 100-foot intervals and locations of all appurtenances by stationing shall be shown on the plan and profile. Where there is any question of the sewer being sufficiently deep to serve any residence or other source, the elevation and location of the basement floor or other low point source shall be plotted on the profile of the sewer, which is to serve the house or source in question. The design engineer shall state that all sewers are sufficiently deep to serve adjacent basements or sources except where otherwise noted on the plans.

2. Locations of all special features such as inverted siphon, concrete encasements, elevated sewers, drop manholes, etc.

3. All known existing and proposed structures both above and below ground, which might interfere with the proposed construction, particularly water mains, gas mains, storm drains, etc.

4. No other utilities shall be drawn on the sheet except for clarification or reference.

1.4 Gravity Sewer Design Basis

1.4.1 Sewer system design features shall generally conform to good municipal practice and to the requirements of TDEC.

a) In determining the required capacities of sanitary sewers, the following factors must beconsidered:

1. Maximum hourly quantity ofwastewater.

2. Additional maximum wastewater from industrial and commercial facilities.

3. Ground water infiltration.

b) Sewer systems serving residential development should be designed on the basis of an average daily per capita flow of wastewater of not less than 100 gallons per day. This amount of flow is assumed to cover nominal infiltration, but an additional allowance should be made where conditions are unfavorable.

c) Generally, the sewers should be designed to carry, when running full, not less than the following daily per capita contributions of wastewater, exclusive of wastewater from industrial plants:

1. Laterals and sub-main sewers: 400% of average design flow.

2. Main, trunk and outfall sewer: 250% of average design flow.

d) In general, sewer systems shall be designed for the estimated ultimate tributary population or build-out.

1.4.2 Sewer collection lines shall be at least 8-inches in diameter. Service lines (lateral line running from the collection sewer to the point at which the sewer customer is to tie-in) shall be at least 6-inches in diameter.

a) All conventional gravity sewers shall be designed and constructed to give mean velocities when flowing full of not less than 2.0 feet per second. The following minimum slopes should be provided; however, slopes greater than these are desirable:

Sewer Size (Inches)	Minimum Slope (feet per 100 feet)
8	0.40
10	0.28
12	0.22
14	0.17
15	0.15
16	0.14
18	0.12
21	0.10

Sewer system design shall allow a drop in elevation sewer through each manhole of at least 0.2 feet unless approved otherwise by the City Engineer.

b) Sewers shall be designed with straight alignment between manholes.

c) When a smaller sewer joins a larger one, the invert of the larger sewer should be lowered sufficiently to maintain the same energy gradient. An acceptable approximate method for securing these results is to place the 0.8 depth point of both sewers at the same elevation.

d) Ductile iron pipe shall be used when slopes are greater than:

Sewer Size	Percent Slope
8”	18%
10”	13%
12”	9%

Steep Slope Criteria: Sewers on 18% slope or greater shall be anchored with concrete anchors or equal. Minimum anchoring spacing is as follows: Not over 36 feet center to center on grades 18% up to 25%. Not over 24 feet center to center on grades 25% up to 35%. Not over 16 feet center to center on grades 35% and over.

1.4.3 Separation of Water Mains and Sewers shall be maintained in accordance with the following guidelines:

a) For parallel installations, line separation is to be at least 10 feet edge to edge. If this cannot be obtained, the bottom of the water line shall be at least 18 inches above the top of the sewer. If this condition is also unobtainable, the sewer line shall be constructed of materials and have a joint design equivalent to water main standards as approved by the City Engineer and shall be pressure tested to 50 psi to assure water tightness.

b) Where the water line crosses house sewers, storm sewers, or sanitary sewers, a separation of at least 18 inches shall be provided between the bottom of the water line and the top of the sewer. If this separation cannot be obtained, sewers within 10 feet of the water line shall be constructed of materials and have a joint design equivalent to water main standards as approved by the City Engineer. Such sewer lines shall be pressure tested to 50 psi to assure water tightness.

c) Water mains passing under sewers shall be protected (in addition to the above sewer line construction) by providing: at least 18 inches between the bottom of the sewer and the top of the water line; adequate structural support of the sewer to prevent excessive joint deflection or damage to the water line; centering of the water line section to result in the water line joints being removed from the sewer line to the maximum possible extent.

d) No water line shall pass through or come into contact with any part of a sewer or sewer manhole.

1.4.4 Sanitary Sewer Services - Sewer services shall not enter manholes except in terminal manholes.

1.4.5 Easements - When sanitary sewers are constructed outside a public right-of-way, easements must be provided using the following:

Sewer Depth (feet)*	Easement Width Required (minimum)
0-12	20 feet
12-20	30 feet

*No sewer shall be allowed deeper than 20 feet without special approval by the City Engineer. Also, any sewer over 12 feet deep must be constructed using ductile iron pipe.

1.4.6 Drop Manholes - An outside drop connection shall be provided for a sewer entering a manhole at an elevation of more than 1.9 feet above the manhole invert. Where the difference in elevation between the incoming sewer and manhole invert is 1.9 feet or less, the invert should be filleted to prevent solids deposition.

1.5 Wastewater Lift Station Design Basis

1.5.1 The use of wastewater lift stations shall be avoided if at all possible. However, when the terrain of a particular development requires the use of a wastewater lift station, the design shall conform to the requirements of TDEC and the following City of La Vergne requirements.

1.5.2 At least two pump units shall be provided for each lift station such that, with any one unit out service, the remaining unit(s) shall have capability of pumping the design peak flow.

1.5.3 The lift station shall be constructed at an elevation above the 100-year flood plain.

1.5.4 The lift station site shall be sufficiently large to provide truck access for maintenance purposes. The site shall be contained within a security fence consisting of, at a minimum, a 6-foot tall chain link fence topped with three (3) strands of barbed wire. When lift station sites are adjacent to residential or highly developed areas, fences shall be provided to blend in aesthetically with the surrounding areas. Acceptance of fence design shall rest with the City Engineer.

1.5.5 Wastewater lift stations shall be sized for the specific flow to be handled plus any future wastewater flows that are likely to be generated in the contributing drainage area.

1.6 Force Main Design Basis

1.61 Force main design shall conform to the requirements of TDEC and the following City of La Vergne requirements.

1.6.2 Minimum size of force main shall be 4-inches. Minimum velocity shall be three (3) feet per second.

1.6.3 Appropriate sewage air release, and vacuum valves if necessary, shall be installed at all high points of the force main.

1.6.4 Force mains shall discharge into a “receiving manhole.” Care shall be taken to provide a smooth transition to the gravity sewer in order to minimize turbulence at the point of discharge. All "receiving manholes" shall be provided with an odor prevention carbon filter suspended below the manhole cover. Carbon filter shall be "Sweet Street" as manufactured by Calgon Carbon Corporation or approved equal.

1.7 Pressure Sewers and Grinder Pumps Design Basis

1.7.1 Pressure sewers and grinder pump design criteria are not provided under these standards. Pressure sewer/grinder pump installations will require pre-design approval by the City Engineer and will be reviewed on a case-by-case basis.

1.7.2 At a minimum all pressure sewer piping will be PVC, Schedule 40, with glued joints for sizes 2 inches and smaller. Pressure sewers larger than 2 inches shall be Class 200 PVC as specified hereinafter.

1.7.3 Grinder pumps will be Environment-One (E-One) Model No. WH101 to match existing units already in place in La Vergne. Control panels shall be mounted on each residence with a red alarm light to signal any malfunction.

1.7.4 It shall be necessary that ownership of the grinder pump station and discharge piping be vested in the City of La Vergne one (1) year after the completion of construction.

1.8 Permits

Before beginning any construction, the Contractor shall obtain all necessary permits as required by law. Such permits include, but are not limited to, those from State and County Highway Departments and the City.

1.9 Notification of Construction

1.9.1 The City Engineer shall be notified before construction is to begin. The City Engineer and Public Works shall hold a pre-construction conference prior to beginning construction. A representative of the City, Contractor, Design Engineer, and the City Inspector shall be present. Contractor shall at this time present a schedule of activities and submittals of materials to be incorporated into the project. The Contractor shall establish project communication guidelines and review the City's construction criteria.

1.9.2 Prior to construction commencement, the Contractor shall notify utility companies to locate existing facilities through the Tennessee 811 underground utility notification center.

1.9.3 Contractor shall abide by other utility companies' requirements when repairing, replacing or disturbing existing facilities.

1.9.4 Prior to trench excavation within any public right-of-way, including public alleys, a permit shall be obtained from the governing authority to perform such excavation. As a minimum, the trench backfill and street repair shall be made in accordance with the City standards.

1.10 Inspection

1.10.1 All projects shall be subject to inspection during and upon completion of construction by an authorized representative of the City Engineer. Inspection may consist of full-time resident inspection or part-time inspection at the sole discretion of the City Engineer. Presence or absence of the inspector during construction does not relieve the Developer and/or Contractor from adherence to approved plans and specifications.

1.10.2 The work shall, at all times, be subject to the inspection of authorized representatives of the Department of Public Works and materials and/or workmanship found not meeting the requirements of approved plans and specifications shall be immediately brought into conformity with said plans and specifications.

1.10.3 An authorized representative of the Department of Public Works shall make a final inspection of the project after completion to determine acceptability of the work. Before this final inspection can be made, the Design Engineer responsible for the project shall notify the City Engineer in writing that the work has been completed in accordance with the approved plans and specifications.

1.10.4 All sewer lines shall be inspected by means of internal video inspection as performed by the City of La Vergne. Cost of the video inspection shall be borne by the City. The Contractor shall repair any leaks or other deficiencies identified by the video inspection at his own expense.

1.10.5 Authorized representatives of TDEC shall have the right to inspect the construction work and shall be notified of the final inspection date on the work.

1.10.6 Prior to twelve (12) months following acceptance of the sewer line, the City shall conduct a follow-up inspection to determine if any failures/deficiencies have occurred as a direct result of the Contractor's work and/or materials. The developer and/or Contractor may have a representative at this inspection. The Developer and/or Contractor will be responsible for correction of all failures/deficiencies that have occurred during the first year of operation.

1.11 Final Acceptance

1.11.1 When facilities qualify as public facilities, the City will accept ownership of the completed facilities when the work has passed the final inspection and when final drawings are submitted to the City Engineer reflecting actual "As Built" conditions. The "As Built" drawings shall be complete and show final location of sewer lines, manholes, services, and other items appurtenant to the system. Two (2) sets of "As-Built" drawings and one (1) CD, DVD, or Flash Drive containing the “As-Built drawings in a format acceptable to the city shall be submitted to the City Engineer before final acceptance of the work is made. The City Engineering Department will review the prints and, if acceptable, will begin the one (1) year warranty period.

1.11.2 Final acceptance by the City will be made in writing by the City Engineer upon satisfactory completion of the project including final inspection and submittal of "As Built" drawings. The Developer shall guarantee the work for a period of one (1) year from the date of final acceptance and shall immediately correct any deficiencies in the work, due to materials and/or workmanship, which occur during the warranty period.

1.12 Execution

All construction on the City of La Vergne's wastewater collection system that is not performed by the City shall be executed by a person, firm, or corporation licensed to engage in contracting as set forth in the Tennessee Contractors Licensing Act of 1994 (TCA 62-6-101) or subsequent revisions. This requirement shall apply to all construction regardless of the amount of work involved.

1.13 Standards Flexibility

1.13.1 Interpretations of these Standard Sewer Specifications and Details or the determination of any other City standards and design criteria not covered under these Standard Sewer Specifications and Details shall be at the discretion of the City Engineer. The decision of the City Engineer shall be based on past practices, traditional policies, widely accepted professional principles and practices of the industry.

1.13.2 Any disagreement with the interpretations or determinations made by the City Engineer of the City of La Vergne with respect to these Standard Sewer Specifications and Details or any other standards not covered herein may be appealed to the City Administrator.

2.0 PRODUCTS AND MATERIALS

2.1 Backfill

Materials for backfilling shall conform to the following requirements:

2.1.1 Select Earth Backfill: Fine, sound, loose earth containing optimum moisture content for compaction to 90 percent of maximum density, free from all wood, vegetable matter, debris, and other objectionable material, and having scattered clods, stones, or broken concrete or pavement less than 2 inches in maximum dimension, except that the maximum particle size shall be 3/4 inch when used with PVC or other flexible thermoplastic pipe.

2.1.2 Common Earth Backfill: Sound, loose earth containing optimum moisture content for compaction to 90 percent of maximum density, free from all wood, vegetable matter, debris, and other objectionable material, and having scattered clods, stones, or broken concrete and pavement less than 6 inches in maximum dimension.

2.1.3 Sand: Natural or imported sand conforming to ASTM D 1073.

2.1.4 Crushed Stone: Crushed stone conforming to Size No. 7 or No. 67 of the "Standard Specifications for Road and Bridge Construction" (SSRBC), Tennessee Department of Transportation.

2.1.5 Class B Concrete: Class B Concrete as specified elsewhere in these Specifications.

2.2 Concrete

Materials for the various forms and class of concrete used in conjunction with the installation, protection, or repair of sewer lines and appurtenances shall conform to the following requirements:

2.2.1 Cement: Cement shall be Portland cement conforming to "Standard Specifications for Portland Cement", Type 1, ASTM Designation C150, latest revision.

2.2.2 Fine Aggregate: Fine aggregate shall be clean, hard uncoated natural sand conforming to ASTM Designation C33, latest revision, "Standard Specifications for Concrete Aggregate".

2.2.3 Coarse Aggregate: Coarse aggregate shall consist of clean, hard, dense particles of stone or gravel conforming to ASTM Designation C33, latest revision. Aggregate shall be No. 57 or No. 67 crushed stone, SSRBC.

2.2.4 Water: Water used in mixing concrete shall be clean and free from organic matter, pollutants and other foreign materials.

2.2.5 Ready Mix Concrete: Ready Mix concrete shall be secured only from a source approved by the City Engineer, and shall conform to ASTM Designation C94, latest revision, "Specifications for Ready Mix Concrete". Before any concrete is delivered to the job site, the supplier must furnish a statement of the proportions of cement, fine aggregate and coarse aggregate to be used for each mix ordered.

2.2.6 Class "A" Concrete: Class A concrete shall have a minimum compressive strength of 4,000 pounds per square inch in 28 days and shall contain not less than 6 sacks of cement per cubic yard.

2.2.7 Class "B" Concrete: Class B Concrete shall have a minimum compressive strength of 2,000 pounds per square inch in 28 days and shall contain not less than 4-½ sacks of cement per cubic yard.

2.2.8 Metal Reinforcing: Reinforcing bars, where required, shall be grade 60 deformed, conforming to ASTM Designation A615, latest revision.

2.3 Sewer Manholes and Covers

2.3.1 Manholes: Manholes shall be precast reinforced concrete meeting the requirements of ASTM Standard C478, except as may be provided otherwise in the following:

a) Manhole inside diameter shall be 48-inches for 18-inch and lesser diameter pipe and 60-inches for 21-inch to 30-inch diameter pipe.

b) Wall thickness shall be a minimum of 5-inches for manholes 48-inch in diameter and a minimum of 6-inches for manholes 60-inch in diameter.

c) The minimum compressive strength of precast manhole risers, bases, cones or top sections, and grade rings shall be 4,000 psi.

d) The access opening in cones or top sections shall be a minimum of 24 inches.

e) Joints: The reinforced concrete manhole base and riser sections, excepting grade rings, shall be formed with male and female ends, so that when the manhole base, riser, and top are assembled they will make a continuous and uniform manhole.

f) Lift eyes or holes may be provided in each section for the purpose of handling, but most not protrude through the concrete walls.

g) Poured-in-place reinforced concrete manholes may be used with prior approval of the City Engineer.

2.3.2 Precast Reinforced Concrete Manhole Bases:

a) Base riser sections shall have the base slab cast monolithically with the walls.

b) Bases for pipe 10-inches diameter or less shall have a minimum outside height of 27-inches.

c) Bases for 12-inch through 18-inch diameter pipe shall have a minimum outside height of 40-inches.

d) Heights of bases for pipes greater than 18-inches in diameter shall be according to the manufacturer's specifications, subject to prior approval of the City.

2.3.3 Precast Reinforced Concrete Tops:

Precast tops shall be of the following two (2) types:

a) Eccentric cone

b) Flat slab top

2.3.4 Precast Reinforced Concrete Grade Rings:

a) Grade ring wall thickness shall be a minimum of 5-inches for manhole 48-inch diameter and a minimum of 6-inches for manholes 60-inch diameter.

b) Grade rings shall be 2, 4, or 6-inches in height.

c) The combined height of grade rings shall be a maximum of 12-inches. In areas of construction above existing sewer where fill operations will take place, manholes shall be adjusted by adding appropriate length of manhole riser section.

2.3.5 Other Precast Manhole Requirements

a) All precast manholes shall be cast with XYPEX® Admix C-1000 in the concrete for waterproofing and corrosive protection. The manufacturer's recommended addition rate for Concentrate C-1000 is 3% by weight of cement. XYPEX® Concentrate C-1000 shall be as supplied by Nexgen Coating Resources; 1231 Antioch Pike; Nashville, Tennessee, or equal.

b) Manhole sections showing evidence of cracking, crazing, honeycombing, crumbling or excessive roughness will not be acceptable. Sections with improper cut-outs, misalignments or other defects shall not be acceptable.

c) Manhole sections shall be steam or water cured and shall not be delivered to job site until at least 7 days old. Each section shall be marked with date of manufacture and manufacturer's mark in a permanent manner.

d) Testing and Acceptance of precast manhole sections shall be done in accordance with ASTM C-478 by an independent laboratory suitable to the City Engineer. Compression tests shall be run on specimens obtained from each day's production: a minimum of 2 cylinders or cores per day's run but no less than the maximum number designated by ASTM C-478. The absorption test shall be run on a minimum of 2 randomly selected manhole sections per each day's production.

e) Section Joints: Base risers, section risers, and tops shall be designed for confined O-ring gasket joints meeting the latest requirements of ASTM Standard C-443 or flexible butyl resin sealant (2 strips required) meeting the latest requirements of AASHTO Standard M198-B. Excess butyl resin sealant shall be trimmed from the inside of the manhole cover prior to final acceptance. All lifting holes, honeycomb and other surface defects shall be patched with non-shrink grout. All grade adjustment rings shall be wiped on the inside with non-shrink grout. Manhole frames shall be grouted to the cone sections with non-shrink grout.

2.3.6 Manhole Steps

a) Manhole steps shall be fabricated from aluminum alloy 6061, T6 or 3/8" steel reinforced rod encapsulated in polypropylene plastic. Aluminum in contact with concrete shall be coated with heavy bituminous paint.

b) Manhole steps shall be corrosion resistant, free from sharp edges, burrs, or other projections which may be a safety hazard, and shall be of sufficient strength to have a live load of 300 pounds imposed at any point.

c) The minimum width of cleat shall be 10-inches.

d) The legs and struts shall be of sufficient length for the cleat to project a minimum clear distance of 4-inches from the wall when the step is securely imbedded in the manhole wall.

e) The top surface of the cleats shall be designed to prevent foot slippage.

f) Steps should be positioned vertically over a pipe inlet or outlet and at a maximum spacing of 16-inches.

g) Steps shall be the same size, projection, spacing, and alignment in each manhole.

2.3.7 Resilient Connectors

a) All connections of pipes to manhole sidewalls shall be made with resilient connectors. The sidewall opening shall be manufactured to allow for lateral and vertical movement, as well as angular adjustments through 20 degrees. The resilient connectors shall be Kor-N-Seal, A-LOK, or approved equal. The resilient connector shall meet all physical and performance requirements as set forth by ASTMC923.

b) Field connections to existing manholes shall be made by coring and the addition of a resilient connector.

2.3.8 Manhole Covers

a) Manhole cover frames and lids shall be of gray cast iron meeting the latest requirements of ASTM Standard A48, Class 30 (30,000 psi).

b) Manhole frames shall have clear openings of 24-inches, heights of approximately 6-inches, and overall base diameters of 35-inches. The base shall have four uniformly spaced holes for attachment to the manhole using 5/8-inch diameter bolts.

c) Manhole covers shall be Vulcan V-1115, John Bouchard & Sons No. 1155, or approved equal. Shallow type manhole covers shall be Vulcan V-1600-4, John Bouchard & Sons No. 1312, or approved equal. Watertight manhole covers shall be Vulcan V- 2150-3, John Bouchard & Sons No. 1123, or approved equal.

2.3.9 Shallow Manholes

Shallow manholes shall be those where the depth is less than 4 feet. These manholes shall be constructed using a flat top section. A shallow type frame and cover shall also be used.

2.4 Pipe

Pipe used for sewer lines, force mains, grinder sewer pressure applications, and pumping stations shall be of the following type or types:

Gravity Sewer:	Ductile Iron Pipe (DIP) with special lining Polyvinyl Chloride (PVC) Pipe for gravity sewer, SDR26
Force Main:	DIP High Density Polyethylene (HDPE) Pipe PVC for pressure applications, SDR 21
Grinder Sewer Pressure Applications:	Polyvinyl Chloride Pipe (PVC) for pressure, SDR 21 (main lines) Schedule 40 PVC (service lines)
Pumping Stations:	DIP (main pump stations) Schedule 80 PVC (grinder pumps)

2.4.1 Ductile Iron Pipe (DIP)

a) Ductile iron pipe shall be manufactured in accordance with ANSI/AWWA C151/A21.51, "Ductile Iron Pipe Centrifugally Cast in Metal Molds or Sand-Lined Molds for Water or Other Liquids," and shall be made of ductile iron having a minimum tensile strength of 60,000 psi, minimum yield strength of 42,000 psi, and 10 percent minimum elongation.

b) Ductile iron fittings shall conform in every respect to ANSI/AWWA C110/A21.10, "3 Inch through 48 Inch for Water and Other Liquids" or ANSI/AWWA C153/A21.53, "3 Inch through 16 Inch for Water and Other Liquids."

c) Joints for ductile iron pipe and fittings shall be mechanical joints, flanged joints, or push-on joints. All ductile iron pipe laid underground shall be joined using mechanical joints or push-on type joints.

1. Mechanical joints shall consist of a bolt joint of the stuffing box type as detailed in ANSI A21.10 and described in ANSI A21.11. Mechanical joints shall be thoroughly bolted in accordance with the manufacturer's recommendations with Tee Head Bolts and bolts of high strength, low-allow steel having minimum yield point strength of 40,000 psi and an ultimate tensile strength of 70,000 psi. Gaskets, bolts, and nuts shall conform to ANSI A21.11. Gaskets shall be of neoprene or rubber of such quality that they will not be damaged by the liquid or gases with which they will come into contact.

2. Flanged joints shall conform to ANSI 816.1, Class 125, in accordance with Table 10.23 of ANSI A21.10. Flanged joints shall be bolted with through stud or tap bolts of required size. Bolts and nuts shall be as specified in ANSI 818.2.1 and 818 .2.2. Bolts and nuts shall be of low carbon steel conforming to ASTM A307 and AWWA C110/C115. Gaskets shall be full face type, 1/16 inch thick, conforming to the requirements of AWWA C111.

3. Push-on joints shall conform to ANSI A21.11. Details of the joint design shall be in accordance with the manufacturer's standard practice. Gaskets shall be in accordance with ANSI A21.11 and shall be of such quality that they will not be damaged by the liquid or gases with which they will come into contact.

d) All ductile iron pipe and fittings buried underground or submerged shall have a standard bituminous outside coating conforming to ANSI A21.6 or A21.51. All exposed ductile iron pipe and fittings shall have an outside shop coating of Rust Oleum 950 rust inhibitive primer. All ductile iron pipes shall have cement mortar lining and bituminous seal coating inside in accordance with ANSI A21.4.

e) All elbows, tees, branches, crosses, and reducers in pressure piping systems shall be adequately restrained against thrust. Underground pressure piping shall be restrained by thrust restrained joints (EBAA Iron Megalug Series 1100, American Fast Grip Gasket, or approved equal). Install restraints in accordance with manufacturer's recommendations. Install number of restraints recommended by manufacturer for size of pipe, type of fitting, and type of soil.

f) Where a special lining is required for resistance to corrosive wastewaters, pipe and fittings shall be furnished with a minimum 20-mil-thick lining of chemically inert, abrasion-resistant polyethylene. The lining shall be a blend of high density and low density polyethylene powders complying with ASTMD1248 compounded with carbon black to provide resistance to ultraviolet rays during storage above ground. The lining shall be unaffected by hydrogen sulfide, detergents, grease, oil, inorganic acids, alkalis, and most organic materials found in municipal wastewaters. Polyethylene-lined ductile iron pipe shall be U.S. Pipe "Polylined," American Cast Iron Pipe "Polybond," or equal.

2.4.2 Polyvinyl Chloride (PVC) Pipe for Gravity Sewers

a) PVC pipe and fittings shall meet the requirements of:

1. ASTM D3034 "Standard Specification for Type PSM Polyvinyl Chloride (PVC) Sewer Pipe and Fittings," SDR 26, in sizes 4"-15".

2. ASTM F679 "Standard Specification for Polyvinyl Chloride (PVC) Large Diameter Plastic Gravity Sewer Pipe and Fittings" T-1, SDR

26, in sizes 18-inches-27-inches.

b) Gaskets shall be ASTM F477, "Standard Specification for Elastomeric Seals (Gaskets) for Joining Plastic Pipe." Gaskets shall be factory installed and positively retained by means of a stainless steel, polypropylene or PVC ring.

c) Push-on joint shall meet ASTM D3212, "Standard Specification for Joints for Drain and Sewer Pipes Using Flexible Elastomeric Seals."

d) PVC material shall be 12454-8, 12454-C, or 13343-C as defined in ASTM D1784, "Standard Specification for Rigid Polyvinyl Chloride (PVC) Compounds and Chlorinated Polyvinyl Chloride (PVC) Compounds and Chlorinated Polyvinyl Chloride (CPVC) Compounds."

2.4.2 High Density Polyethylene (HDPE) Pipe

a) HDPE pipe and fittings shall be high performance, high molecular weight, high density polyethylene pipe as manufactured in accordance with ASTM D1248.

b) The pipe material shall be a Type III, Class C, Category 5, P34 material as described in ASTM D1248. Minimum cell classification values of the pipe material shall be in conformance with ASTM D3350.

c) Fittings shall be molded from a polyethylene compound having a cell classification equal to or exceeding the compound used in the pipe or shall be manufactured using a polyethylene compound having a cell classification equal to or exceeding the cell classification of the pipe supplied under this Specification. To ensure compatibility of polyethylene materials, all fittings supplied under this Specification shall be of the same manufacturer as the pipe being supplied.

d) Physical Properties of Pipe Compound

1. Density. The density shall be 0.941-0.957 grams/cm^3 when tested in accordance with ASTM D1505.

2. Melt Flow. Melt flow shall be not greater than 0.15 grams/10 min. when tested in accordance with ASTM D1238-Condition E. (Melt flow shall be no greater than 4.0 gms/10 min. when tested in accordance with ASTM D1238-Condition F.)

3. Flex Modulus. Flexural Modulus shall be 110,000 psi to less than 160,000 psi when tested in accordance with ASTM D790.

4. Tensile Strength at Yield. Tensile strength at yield shall be 3,200 psi to less than 3,500 psi when tested in accordance with ASTM D638.

5. ESCR. Environmental stress crack resistance shall be in excess of 5,000 hours with zero failures when tested in accordance with ASTM D1693-Condition C.

6. Hydrostatic design basis shall be 1,600 psi at 23°C when tested in accordance with ASTM D2837.

e) Pipe Dimensions

HDPE pipe shall have a nominal iron pipe size (IPS) OD unless otherwise specified. The standard dimension ratio (SDR) of the pipe supplied shall be SDR 17.

2.4.3 Polyvinyl Chloride (PVC) Pipe for Pressure Applications

a) Pipe shall meet ASTM D2241, "Standard Specification for Polyvinyl Chloride (PVC) Plastic Pipe (SDR-PR)," Class 200, SDR 21. Length shall be 20 feet.

b) Gaskets shall be ASTM F477, "Standard Specification for Elastomeric Seals (Gaskets) for Joining Plastic Pipe." Gaskets for pipe 6 inch and larger shall be supplied with retainer rings.

c) Push-on joints shall be ASTM D3139, "Standard Specification for Joints for Plastic Pressure Pipe Using Flexible Elastomeric Seals."

d) PVC material 12454-8 (PVC 1120) shall be ASTM D1784, "Standard Specification for Rigid Polyvinyl Chloride (PVC) Compounds and Chlorinated Polyvinyl Chloride (CPVC) Compounds."

e) Fittings for pressure applications shall be long body ductile iron and shall be equipped with EBAA Iron Series 200 PV joint restraint, concrete thrust blocks, or approved equivalent thrust restraint.

2.4.4 Polyvinyl Chloride (PVC) Pipe, Schedule 40

b) Pipe shall be manufactured in accordance with ASTM D2466 with dimensions in accordance with ASTM D1785.

c) Schedule 40 PVC fittings shall be produced from PVC Type 1 Cell Classification 12454, conforming to ASTM D1784.

2.5 Check Dams

Check dams shall be installed in the bedding of sewer lines to limit the drainage area subject to the French drain effect of gravel bedding. Dams shall consist of compacted clay bedding and backfill at least three-feet thick to the top of the trench and cut into the wall of the trench two-feet. Concrete may be used as an alternative to key into the trench walls. Dams shall be placed no more than 500 feet apart. All stream crossings shall include check dams on both sides of the crossing.

2.6 Vent Pipes

Vent pipes shall be a minimum of 4 inches in diameter and per the standard details. Vents shall be supplied at the rate of one per every 1,000 feet of continuous sealed sewer sections.

2.7 Pipeline Detection Tape

Non-metallic force mains shall be installed with pipeline detection tape. Pipeline detection tape shall be plastic composition film containing one layer of metalized foil laminated between two layers of inert plastic film specifically formulated for prolonged use underground. Tape shall be minimum of 5.5 mils thickness, green in color, and continuously printed in permanent ink to indicate caution for a buried line below. Tape shall be a minimum of 3 inches in width with a minimum tensile strength of 5,000 psi. Tape shall be Terra-Tape as manufactured by Reef Industries, Inc., or approved equal.

2.8 Sewer Service Connections

2.8.1 Sewer service pipe and fittings shall have a minimum diameter of 6 inches and shall be installed from the collector lines to the street right-of-way lines or edges of easements provided. Service pipe shall be the same material as the run of pipe on which it is placed. The standard collector tap shall consist of a tee connected with a 6-inch diameter branch. One (1) service shall be required per residential lot and as required for commercial and industrial installations.

2.8.2 Typical sewer service clean-outs (6-inch or 4-inch) shall be installed as per the standard details. The clean-out shall consist of a clean-out wye (no tees) along with a 45° bend, and a 6-inch or 4-inch plug or cap.

2.8.3 Risers, if required, having 45 degree angles or less measured from the horizontal may be used when the depth of the sewer collector is greater than 8 feet or when their use will facilitate connection of individual services. All risers having angles of 30 degrees or greater measured from the horizontal shall be placed in a bedding of compacted size No. 7 or 67 crushed stone having a minimum width of 3 times the pipe diameter, a minimum thickness under the pipe equal to the pipe diameter, and an overall thickness of twice the pipe diameter. A minimum of 6 inches of bedding stone shall be placed above the top of all PVC risers.

2.8.4 Ends of service pipe shall be plugged to facilitate air testing.

2.8.5 The minimum grade on service pipes shall be one percent or 1/8 inch per foot.

2.8.6 Ends of service pipes shall be field located (1) by recording the distances measured along the collector lines from the nearest downstream manhole to points at right angles to such service pipe ends and recording the perpendicular distances measured between the collector lines and the service pipe ends and, (2) by installing a minimum 5-foot length of minimum 1/2-inch diameter iron bar or PVC pipe at the service pipe ends and protruding 2 feet above the ground surface vertically above such service pipe ends.

2.8.7 Sewer service lines extending from the public sewer at the right-of-way or property line to the individual house or establishment shall be installed by a licensed plumber and shall meet the requirements of the appropriate building code.

2.9 Wastewater Lift Stations

2.9.1 Lift stations shall be of the "suction lift" configuration as manufactured by Smith and Loveless Co., or approved equal.

2.9.2 Lift station site shall be equipped with a permanent potable water supply with reduced pressure backflow preventer.

2.9.3 Lift station site shall be provided with a minimum 12-foot wide asphalt access road.

2.9.4 Lift station site shall be provided with a pole mounted security light.

2.9.5 Controls shall include automatic alternation of duty pump to equalize wear on pumps.

2.9.6 A wireless (cellular) SCADA system for alarm notification shall be installed within the control panel or lift station enclosure. Developer shall make provision for electric and telephone service to the lift station site, with monthly service fees after the lift station is placed into service to be the responsibility of the City of La Vergne.

2.9.7 Provisions shall be made for an emergency generator receptacle and manual transfer switch on the incoming power supply. Receptacle shall match equipment currently in use by the City of La Vergne.

2.9.8 Provisions shall be made for an odor control system including bulk chemical storage tank and chemical feed station. Equipment types shall match equipment currently in use by the City of La Vergne.

2.9.9 A buried isolation valve (plug valve) shall be installed on the force main immediately adjacent to where the force main leaves the lift station.

2.9.10 Emergency pump connection beyond the isolation valve: A 6-inch valved connection terminating in a blind flange above grade shall be installed.

2.10 Valves

2.10.1 Force main air release valves for use on pressure sewage force mains shall be of the combination air release/vacuum breaker design. Internal valve components shall be constructed of stainless steel, brass, and/or bronze to minimize corrosion. Each valve shall be designed/sized for its particular application. Valves shall be manufactured by ARI, APCO, or approved equal.

2.10.2 Gate valves shall be of the ductile iron body, resilient seated type, manufactured in conformance with AWWA C509. Gate shall be of ductile iron with bonded resilient seat and integral flush drain. Minimum working pressure shall be 200 psi.

2.10.3 Plug valves shall be of the eccentric, non-lubricated type with resilient, neoprene-faced or epoxy-coated plugs providing drip-tight shut-off at rated pressure. Port area shall not be less than 80 percent of the corresponding full pipe area. Valves shall operate from fully open to fully closed with a 90 degree rotation of the valve stem. Valves shall be designed for a working pressure of not less than 150 psi. Valves shall be drip-tight at rated pressure differential in both directions.

2.10.4 Check valves shall be of the swing type suitable for use in either horizontal or vertical piping. Disc shall swing entirely clear of the path of flow when in the open position. All internal parts shall be readily accessible and easily replaced in the field. Check valves shall be iron body, bronze mounted valves conforming to AWWA C508, epoxy-coated inside and outside. Valves shall have cast iron body, bolted and gasketed cover, stainless steel or bronze hinge pin, rubber faced, renewable, bronze or cast iron resilient disc, renewable bronze seat ring, outside lever and adjustable weight, and 125-pound flanged ends per ANSI B16.1.

2.10.5 Valve Boxes

All buried valves shall be provided with three-piece, cast iron, extension sleeve type valve boxes. Valve boxes shall not be less than 5 inches in diameter, shall have a minimum thickness of 3/16 inch at any point, and shall be provided with suitable cast iron bases and covers. Covers shall have cast thereon an appropriate name designating the service for which the valve is intended. All parts of valve boxes, bases, and covers shall be heavily coated with a suitable bituminous finish.

2.10.6 Pressure Sewer Service Assemblies

Each service line from the pressure sewer main to the individual customer at the edge of the right-of-way, property line or easement shall include a redundant check valve and isolation ball valve installed in a meter box. Meter box shall be rectangular, of high density polypropylene construction, with a bolt down lid. PVC ball valves shall be of true union design with permanently lubricated Teflon seats and elastomer "O"-ring seals. The valves are to be opened and closed with a quarter turn. Working pressure at 70 degrees F shall be 150 pounds per square inch. Connection assembly shall include a redundant check valve for installation in the discharge line between the grinder pump and the sewer force main to ensure maximum protection against backflow in the event of sewer service line break. The check valve shall be 1-1/4-inch E-1 (Environment One Corporation) glass lined check valve.

3.0 EXECUTION

3.1 Earthwork

3.1.1 Perform earthwork operations in a safe and proper manner taking appropriate precautions against all hazards.

3.1.2 Maintain in good condition at all times all excavated and fill areas for structures, trenches, fills, topsoil areas, embankments, and channels until final acceptance by the Owner. Repair all damage caused by erosion or other construction operations using material of the same type as the damaged materials.

3.1.3 Earthwork operations within the rights-of-way of the Tennessee Department of Transportation, the County Road Department, and the City of La Vergne shall be conducted in accordance with the requirements and provisions of the permits issued by those agencies for the construction within their respective rights-of-way. Such requirements and provisions, where applicable, shall take precedence over and supersede the provisions of these Specifications.

3.1.4 Control grading to prevent water running into excavations. Obstruction of surface drainage shall be avoided and a means shall be provided whereby storm water can be uninterrupted in existing gutters, other surface drains, or temporary drains. Material for backfill or for protection of excavation in public roads from surface drainage shall be neatly placed and kept shaped so as to cause the least possible interference with public travel. Free access must be provided to all fire hydrants and private drives.

3.1.5 All earthwork operations shall comply with the requirements of OSHA Construction Standards, Part 1926, Subpart P, "Excavations, Trenching, and Shoring," and Subpart O, "Motor Vehicles, Mechanized Equipment, and Marine Operations."

3.1.6 Remove and dispose of any excess material resulting from clearing or site preparation operations. Dispose of such materials in a manner acceptable to the City Engineer and at a location where such materials can be lawfully placed.

3.2 Slope Protection and Erosion Control

3.2.1 The Owner and Contractor shall submit a Construction Activities - Storm Water Discharges, Notice of Intent (NOI) to TDEC for construction activities that disturb one (1) acre or more.

3.3.2 The Contractor shall implement a project specific Storm Water Pollution Prevention Plan (SWPPP) for all construction activities that disturb one (1) acre or more. The SWPPP shall incorporate written procedures and methods that the Contractor shall utilize during the performance of the work to mitigate stream pollution due to storm water runoff.

3.3.3 The SWPPP shall be in conformance with Part IV of Tennessee General Permit No. TNR10-0000 Storm Water Discharges from Construction Activities, Tennessee Department of Environment and Conservation, Division of Water Resources.

3.3 Dewatering

3.3.1 Provide and maintain at all times during construction ample means and devices with which to promptly remove and properly dispose of all water from any source entering excavations or other parts of the work. Dewatering shall be accomplished by methods which will ensure a dry excavation and preservation of the final lines and grades of the bottoms of excavations.

3.3.2 If foundation soils are disturbed or loosened by the upward seepage of water or an uncontrolled flow of water, excavate and replace the affected areas with crushed stone.

3.3.3 Dispose of the water from the work in a suitable manner without damage to adjacent property. Conveyance of the water shall not interfere with traffic flow. Do not drain water into work built or under construction.

3.3.4 Provide sedimentation and desilting basins as necessary to prevent the entrance of excessive or injurious amounts of sand and silt from surface runoff or dewatering operations into storm drains or receiving waters. The system used for desanding or desilting the water shall be a baffled structure and shall provide not less than 5 minutes detention time and shall be designed to have a "flow-through" velocity not exceeding 0.2 feet per second at the anticipated peak flow.

3.3.5 Dispose of water safely and in accordance with applicable Environmental Protection Agency, U.S. Army Corps of Engineers, and TDEC standards and permits.

3.4 Sheeting, Shoring, and Bracing

3.4.1 The sides of all excavations shall be sufficiently sheeted, shored, and braced as necessary to prevent slides, cave-ins, settlement, or movement of the banks; to maintain the excavation clear of all obstructions; and to provide safe working conditions. Wood or steel sheeting shall be used in wet, saturated, or flowing ground. All sheeting, shoring, and bracing shall have sufficient strength and rigidity to withstand the pressure exerted and to maintain shape and position under all circumstances.

3.4.3 Correctly assessing the need for sheeting, analyzing the stresses induced, and maintaining regulatory compliances shall be totally the responsibility of the Contractor. The Contractor must employ or otherwise provide for adequate professional structural and geotechnical engineering supervision to assess the need for sheeting and shoring and design same.

3.4.3 Excavations adjacent to existing or proposed buildings and structures, or in paved streets or alleys, shall be sheeted, shored, and braced adequately to prevent undermining beneath or subsequent settlement of such structures or pavements. Underpinning of adjacent structures shall be done when necessary to maintain structures in safe condition. Any damage to structures or pavements occurring through settlements, water or earth pressures, slides, cave-ins, or other causes due to failure or lack of sheeting or bracing, or improper bracing or occurring through negligence or fault of the Contractor in any other manner shall be repaired by the Contractor at his own expense.

3.4.4 Sheeting, shoring, or bracing materials shall not be left in place. Such materials shall be removed in such manner that no danger or damage will occur to new or existing structures or property, public or private, and so that cave-ins or slides will not take place. Trench sheeting shall be left in place until backfill has been brought to a level 12 inches above the top of the pipe. It shall then be cut off and the upper portion removed. Sheeting for structures shall be left in place until backfill has been brought to a level 12 inches above the top of the bottom footing. It shall then be cut off and the upper portion removed.

3.4.5 All holes and voids left in the work by the removal of sheeting, shoring, or bracing shall be filled and thoroughly compacted.

3.5 Excavation

3.5.1 Trench excavation must be done in a neat and workmanlike manner maintaining proper vertical and horizontal alignment. Trenches shall be neatly excavated to the alignment and depth required for the proper installation of pipe, bedding material and appurtenances. Trenches shall be opened up far enough ahead of pipe laying to reveal obstructions, but in general shall not include more than 400 feet of continuous open trench at any time. Adequate temporary bridges or crossings shall be constructed and maintained where required to permit uninterrupted vehicular and pedestrian traffic.

3.5.2 Wherever pipe trenches are excavated below the required elevation, the Contractor shall fill the void thus made at the proper grade with Class B concrete or with compacted layers of crushed stone or sand conforming to the requirements specified herein for backfill.

3.5.3 Where rock is encountered, the excavation shall be carried to a depth of 6 inches below the barrel of the pipe, or the bottom of the structure, and the excess excavation shall be backfilled with crushed stone or sand and firmly compacted. Boulders and large stones, rock or shale shall be removed to provide a clearance of at least 6 inches below all parts of the pipe and fittings and to clear width of at least 6 inches on each side of all pipe and appurtenances.

3.5.4 Where soft clay, spongy or swampy earth, or other materials unsuitable for subgrade or foundation purposes are encountered below the excavation limits, they shall be removed and disposed of to the level of suitable material. Areas so excavated shall be backfilled with Class B concrete or with compacted layers of crushed stone, sand, or other approved material conforming to the requirements specified herein for backfill.

3.5.5 Trench Depth

a. Gravity Sewers - Provide minimum of 5-feet of cover in traffic areas and 4-feet of cover in non-traffic areas, unless ductile iron pipe or concrete encasement is used.

b. Force Mains and Pressure Sewers - Provide minimum of 36-inches of cover in traffic areas and 30-inches of cover in non-traffic areas for pipe through 10-inch diameter and 36-inches of cover for pipe 12-inch and larger.

3.5.6 Trench width. Trench width at the ground surface may vary depending on depth, type of soil, and position of surface structures.

3.5.7 The minimum clear width of the trench, sheeted or unsheeted, measured at the spring line of the pipe shall be 1 foot greater than the outside diameter of the pipe. The maximum clear width of the trench at the top of the pipe shall be equal to the pipe outside diameter plus 2 feet. If the maximum recommended trench width must be exceeded or if the pipe is installed in a compacted embankment, then pipe embedment shall be compacted to a point of at least 2-1/2 pipe diameters from the pipe on both sides of the pipe or to the trench walls, whichever is less.

3.5.8 In all cases where materials are deposited along open trenches, they shall be placed so that no damage will result to the work and/or adjacent property in case of rain or other surface wash.

3.6 Drilling and Blasting

3.6.1 Drilling and blasting operations shall be conducted with due regard for the safety of persons and property in the vicinity and in strict conformity with requirements of all ordinances, laws, and regulations governing blasting and the use of explosives. Conduct rock excavation near existing pipelines or other structures with the utmost care to avoid damage. Promptly repair injury or damage to other structures and properties. The Contractor is advised to hire qualified consultants to perform a "preblast survey" in area where damage could occur due to blasting; all expenses for such survey must be borne by the Contractor.

3.6.2 Where blasting operations are used, the Contractor shall "mattress" the trench during blasting operations and shall use all precautions necessary to protect adjacent property against damage resulting from his operations. Rock excavation in proximity to other pipes or structures and any such damage caused shall be promptly repaired at the Contractor's expense. Blasting operations shall not be conducted within 25 feet of finished sewer or water pipe and rock excavation shall be completed at least 25 feet ahead of pipe laying.

3.6.3 Extreme care shall be exercised in blasting with signals of danger given and displayed before the firing of any charge. The Contractor shall, in all his acts, conform to and obey all rules and regulations for the protection of life and property. No blasting shall be done at any time except by persons experienced in this line of work.

3.6.4 Where rock is encountered in the immediate vicinity of gas mains, telephone cables, building footings, gasoline tanks, or other hazardous areas, the Contractor shall remove the rock by means other than blasting. Care shall be taken in blasting operations to see that pipe or other structures previously installed are not damaged by blasting.

3.7 Pipe Laying

3.7.1 Prior to laying pipe, a minimum of 6 inches of crushed stone bedding shall be placed in the bottom of the trench to provide continuous support of the bottom quadrant of the pipe. The Contractor shall bring the crushed stone bedding up to the required level to provide support to the bottom quadrant and shall then shape the bedding to receive the pipe.

3.7.3 Bell holes for bell and spigot pipe and/or mechanical joint pipe shall be excavated at proper intervals so the barrel of the pipe will rest for its entire length upon the bottom of the trench. Bell holes shall be large enough to permit proper installation of all joints in the pipe. Bell holes shall not be excavated more than ten (10) joints ahead of pipe laying. No part of any bell or coupling shall be in contact with the trench bottom, trench walls, or granular embedment when the pipe is jointed.

3.7.3 The Contractor shall exercise care in the storage and handling of pipe, both on the storage yard and at the site of laying operations. Suitable clamps, slings, or other lifting devices shall be provided for handling pipe and fittings. Pipe and fittings shall be inspected for defects and for dirt or other foreign material immediately before placing them in the trench. Suitable swabs shall be available at the site of laying operations, and any dirt or foreign material shall be removed from the pipe before it is lowered into the trench.

3.7.4 Lay pipe true to the lines and grades from the grade and alignment stakes, or equally usable references.

d) Where laser-equipment is used, provide offset hubs at every manhole location or at 100-foot intervals, whichever is less, for purposes of checking grade between sections.

e) Where batter boards are used, provide offset hubs at intervals of 50 feet along the route and at every manhole location. Set hubs at such distance from the centerline of excavations as is suitable for excavating method and machinery to be used.

Provide and use accurately batter boards at a minimum of each 50-foot interval of pipe laid.

f) Accurately establish the centerline of each pipe using a string stretched between targets and a plumb line extended to the centerline of the pipe.

g) Carefully inspect all pipe and each fitting prior to its placement in the trench and reject any defective pipe or fitting from the job site.

h) Lay pipe progressively upgrade, with bell upstream in such a manner as to form close, concentric joints with smooth bottomed inverts. Joining of a pipe shall be in accordance with manufacturer's specifications.

i) Pipe joints shall be assembled with care. When pipe laying is not in progress, open ends of installed pipe shall be closed to prevent entrance of trench water, dirt, foreign matter, or small animals into the pipeline.

j) Do not allow walking on completed pipelines until backfill has been placed to a depth of at least 6 inches above the crown of the pipe.

k) Couplings and adapters used for joining dissimilar gravity pipe materials or for repairing and rejoining sections of gravity sewer shall be of neoprene construction with stainless steel clamps.

3.7.5 Check dams shall be required where pipes cross drainage ways to prevent exfiltration of water from drainage way into pipe trench. Check dams may be required at other locations along the gravity line.

3.8 Backfilling

3.8.1 Initial Backfill: Pipe shall be installed with crushed stone bedding providing uniform longitudinal support under the pipe. Initial backfill material shall be worked under the sides of the pipe to provide satisfactory haunching. Initial backfill material shall be crushed stone and shall be placed to a minimum depth of 6 inches over the top of the pipe. All pipe embedment material shall be selected and carefully placed. Bedding and initial backfill shall be compacted to a minimum of 90 percent standard Proctor. Backfill shall proceed simultaneously on both sides of the pipe to prevent lateral displacement.

3.8.2 Final Backfill: Pipe installed in roadways or paved areas shall be backfilled with crushed stone for the full depth of trench. Full depth backfill will be required for pipes in the pavement or within 2 feet of the pavement. For sewers located 2 feet or more beyond roadways or paved areas, trench backfill shall be of select earth backfill for PVC or other thermoplasic pipe. Select earth backfill or common earth backfill is acceptable as final backfill material for ductile iron pipe.

3.8.3 Compaction of final backfill shall be to 90 percent of maximum density, standard Proctor.

3.8.4 All backfilling shall be done in such a manner that the pipe or structure over or against which it is being placed will not be disturbed or injured. Any pipe or structure injured, damaged, or moved from its proper line or grade during backfilling operations shall be removed and repaired and then rebackfilled.

3.8.5 Pipe Backfill - Deep Sewers. Sewers installed under roadways in which the invert elevation is greater than 6 feet of depth shall use select backfill material (6 inches or less in diameter) from 12 inches above the pipe to 12-inches below the surface elevation. The select backfill material shall be placed in 6 inch layers and compacted to 95% proctor. The sewer pipe shall have a crushed stone envelope surrounding the pipe from 6 inches below to 12 inches above the pipe. The top 12 inches of the trench shall be crushed stone.

3.9 Manholes

3.9.1 Installation

a) Excavate the required depth and remove materials that are unstable or unsuitable for a good foundation. Prepare a level, compacted foundation extending 6 inches beyond the manhole base. Remove all loose earth prior to placing crushed stone base or concrete slab. Fill all disturbed areas below subgrade level with compacted crushed stone. Manholes shall be furnished with a preformed base and shall be set on a compacted crushed stone base to a minimum of 6 inches. The crushed stone base shall be placed on dry consolidated and, when possible, undisturbed soil.

b) Set base plumb and level, aligning manhole invert with pipe invert.

c) Seal joints between manhole sections with rubber O-ring gaskets or flexible butyl resin sealant. Manufacturer's recommendations for placing gaskets or sealant shall be followed. Thoroughly clean bells and spigots of manhole sections to remove dirt and other foreign materials that may prevent sealing. When using butyl resin sealant, unroll the butyl sealant rope directly against base of spigot. Leave protective wrapper attached until sealant is entirely unrolled against spigot. Do not stretch. Overlap from side to side - not top to bottom.

d) Set risers and cones so that steps align, taking particular care to clean, prepare and seal joints.

e) Backfilling around manholes and other concrete structures shall consist of common earth backfill (except in roadways and paved areas backfill shall be compacted crushed stone) placed in 6-inch layers and compacted by tamping to a minimum of 90 percent of the maximum density as specified herein for the full depth of the excavation from the bottom to the finished grade. No backfill shall be placed against concrete structures until the concrete has reached its specified 28-day compressive strength.

f) Where practical, compaction of structural backfill shall be accomplished by power-driven tamping equipment.

3.9.2 Manhole inverts shall be accurately shaped, using concrete, to a smooth surface texture. Invert flow channels shall be shaped having the same radii as those of the pipes for which the channels are being provided. The depth of the channels shall be a minimum of 1/2 the diameter of the pipes being accommodated. From the edge of the shaped flow channels to the manhole walls, inverts shall be sloped upward at a minimum of 1 to 6.

3.9.3 Lift holes leaving less than 2-inches of wall thickness shall be plugged from the outside using a sand cement mortar. Lift holes penetrating the wall shall

be additionally sealed with an interior application of an epoxy gel 1/8-inch thick extending 2-inches beyond the penetration.

3.9.4 Precast concrete grade rings shall be set using Portland cement mortar. Care should be exercised so as not to allow too much water in the cement mortar mix, which may cause shrinkage. Joints of pre-cast concrete grade rings and manhole frames shall be made so as to prevent leakage.

3.9.5 Drop Manholes: Drop pipe construction shall be of ductile iron pipe and ductile iron mechanical joint fittings. The inlet piping of an outside drop shall be bedded in 6-inches of concrete. The remainder of the outside drop shall be backfilled with compacted crushed stone.

3.9.6 Drops shall be 8 inch in size for sewers up to 15 inch and 10 inch in size for sewers greater than 15 inches. Concrete used in constructing drop pipe assemblies shall be Class “B”.

3.10 Disposal of Waste and Unsuitable Materials

3.10.1 All materials removed by excavation which are suitable for the purpose shall be used to the extent possible for backfilling pipe trenches, foundations, and footings and for making embankment fills. All materials not used for such purposes shall be considered as waste materials and the disposal thereof shall be made at the Contractor's expense.

3.10.2 Waste materials shall be spread in uniform layers and neatly leveled and shaped. Spoil banks shall be provided with sufficient and adequate openings to permit surface drainage of adjacent lands.

3.10.3 Unsuitable materials, consisting of wood, vegetable matter, debris, soft or spongy clay, peat, and other objectionable material, shall be removed from the work site and disposed of.

3.10.4 No unsuitable or waste material shall be dumped on private property unless written permission is furnished by the owner of the property.

3.10.5 The Contractor is responsible for any and all permits and other requirements, such as sediment runoff control necessitated by the disposal of waste material.

3.11 Inspection and Testing

3.11.1 General

Inspection and testing of completed sewer lines and appurtenances shall include the following procedures.

a) Upon completion of construction, the Contractor shall remove all sand, dirt, brick and other foreign materials from the sewers and shall conduct his own inspection to locate any defects and determine when the sewers are ready for testing and final inspection by the City Engineer. All apparent defects shall be corrected by the Contractor before testing is undertaker or final inspection is requested.

b) The City Engineer shall be notified when the Contractor has scheduled roundness tests and leakage tests. All sewer lines shall be inspected by means of internal video inspection as performed by the City of La Vergne. Cost of the video inspection shall be borne by the City. The Contractor shall repair any leaks or other deficiencies identified by the video inspection at his own expense.

3.11.2 Roundness Test (PVC Gravity Sewer)

The maximum allowable deflection for PVC gravity sewer pipe is 5 percent. No sooner than one week after installation and backfill, all PVC pipe, 8-inch and larger, shall be checked by pulling a 9-arm mandrel sized at 95 percent of the actual pipe inside diameter through the pipe. Any pipe not passing shall be replaced and retested.

3.11.3 Air Pressure Test (Gravity Sewer)

a) Low pressure air tests shall be required for all gravity sewer lines. Testing equipment shall be top quality, in good condition. Plugs should have a sealing length equal to or greater than the diameter of pipe being tested. External bracing of the plugs should not be required in order for the plug to hold against internal air pressure. The test equipment shall include accurate pressure gages to monitor test pressure, safety relief valve(s), and quick-release air bleed valve(s).

b) The procedure for air pressure testing shall conform to ASTMC828, unless modified herein. After backfilling and cleaning the line (including flushing, if necessary) making sure all service plugs are adequately braced against internal pipe pressure, and checking air test equipment including pipe plugs (suitably braced against internal pipe pressure, if necessary), the sewer line section to be tested shall be pressurized to 4 psig (pounds per square inch-gage) greater than the average back pressure of any ground water that may be over the pipe (2.31 feet of water = 1 psig). At least two (2) minutes shall be allowed for air pressure to stabilize. After the stabilization period and with 3.5 psig minimum pressure in pipeline, air supply shall be disconnected and the time observed which results in a 1 psig pressure drop.

c) The portion of line being tested shall be termed "Acceptable" if the time required for the pressure to decrease by 1 psig is not less than that stated in the following table:

PIPE DIAMETER Inches	Time Minutes/100 ft
6	0.7
8	1.2
10	1.5
12	1.8
15	2.1
18	2.4
21	3.0
24	3.6

3.11.4 Vacuum Testing of Manholes

Before final acceptance, all manholes shall be vacuum tested to at least 10 inches of mercury. The test shall be considered acceptable when the vacuum remains at 10 inches of mercury or drops to no less than 9 inches of mercury within a one (1) minute period. In the event the manhole fails, the test shall be repeated and repairs made to the manhole until satisfactory results are acquired.

3.11.5 Hydrostatic Testing of Force Mains

a) Ductile Iron Pipe

After all force main piping has been placed, backfilled, and flushed, each run of newly laid pipe, or any valved section thereof, shall be tested by the Contractor in accordance with AWWA C600 and the following:

1. Pressurization. After the pipe has been laid, all newly laid pipe or any valved section thereof shall be subjected to a hydrostatic pressure of at least 1.5 times the working pressure at the point of testing. Each valved section of pipe shall be slowly filled with water, and the specified test pressure (based on the elevation of the lowest point of the line or section under test and corrected to the elevation of the test gauge) shall be applied using a pump connected to the pipe. Valves shall not be operated in either the opened or closed direction at differential pressures above the rated pressure. The system should be allowed to stabilize at the test pressure before conducting the hydrostatic test. The hydrostatic test shall be of at least 2-hour duration.

2. Air removal. Before applying the specified test pressure, air shall be expelled completely from the section of piping under test. If permanent air vents are not located at all high points, corporation cocks shall be installed at these points to expel the air as the line is filled with water. After the air has been expelled, the corporation cocks shall be closed and the test pressure applied. At the conclusion of the pressure test, the corporation cocks shall be removed and the pipe plugged or left in place.

3. Examination. Any exposed pipe, fittings, valves, hydrants, and joints shall be examined carefully during the test. Any damaged or defective pipe, fittings, valves, hydrants, or joints that are discovered following the pressure test shall be repaired or replaced with reliable material, and the test shall be repeated until satisfactory results are obtained.

4. Testing allowance defined. Testing allowance shall be defined as the quantity of makeup water that must be supplied into the newly laid pipe or any valved section thereof to maintain pressure within 5 psi of the specified test pressure after the pipe has been filled with water and the air has been expelled. Testing allowance shall not be measured by a drop in pressure in a test section over a period of time.

5. Testing allowance. No pipe installation will be accepted if the amount of makeup water is greater than that determined by the following formula:

$$L = \frac{\mathrm{SD}\sqrt{\mathrm{P}}}{133{,}200}$$

Where:

L = testing allowance (makeup water), in gallons per hour

S = length of pipe tested, in feet

D = nominal diameter of the pipe, in inches

P = average test pressure during the hydrostatic test, in pounds per square inch (gauge)

6. Acceptance of installation. Acceptance shall be determined on the basis of testing allowance. If any test of laid pipe discloses a testing allowance greater than that specified, repairs or replacements shall be accomplished and the pipeline shall be retested until it passes. All visible leaks are to be repaired regardless of the allowance used for testing.

b) HDPE Pipe

Testing in the Trench. Fill the force main with water after it has been laid; bleed off any trapped air. Subject the lowest element in the system to a test pressure of 150% of operating pressure and check for any leakage.

1. The test procedures consist of two steps: The initial expansion and the test phase. When test pressure is applied to a water-filled pipe, the pipe expands. During the initial expansion of the pipe under test, sufficient make-up water must be added to the system at hourly intervals for three (3) hours to maintain the test pressure. After about four (4) hours, initial expansion should be complete and the actual test can start.

2. Maintain the test pressure (described above) over a period of four (4) hours, and then drop the pressure to 90% of test pressure. If the pressure then remains within 5 percent of the target value for one (1) hour, this indicates there is no leakage in the system and the pipeline is acceptable.

3.12 Final Grading

3.12.1 After other earthwork operations have been completed, the sites of all structures, roads, and embankments shall be graded to the required elevations. The finished surfaces shall be left in smooth and uniform planes such as are normally obtainable from the use of hand tools. If Contractor is able to obtain the required degree of evenness by means of mechanical equipment, the use of hand labor methods will not be required. Neatly trim and finish slopes and ditches to required slopes.

3.12.2 Grade and dress all finished ground surfaces to present a surface varying not more than plus or minus 0.10 foot as regards local humps or depressions.

3.13 Topsoil

All areas to be planted with trees or shrubs, or grass, shall be prepared by grading to a smooth, even surface to a level 4 inches below the elevation of the finished grade. It shall then be brought to a neat and finished grade by the addition of 4 inches of topsoil.

3.13 Settlement

3.13.1 The Contractor shall be responsible for all settlement of backfill, fills, and embankments which may occur within one (1) year after final acceptance of the work by the City.

3.13.2 The Contractor shall make, or cause to be made, all repairs or replacements made necessary by settlement within 30 days after receipt of written notice from the City.

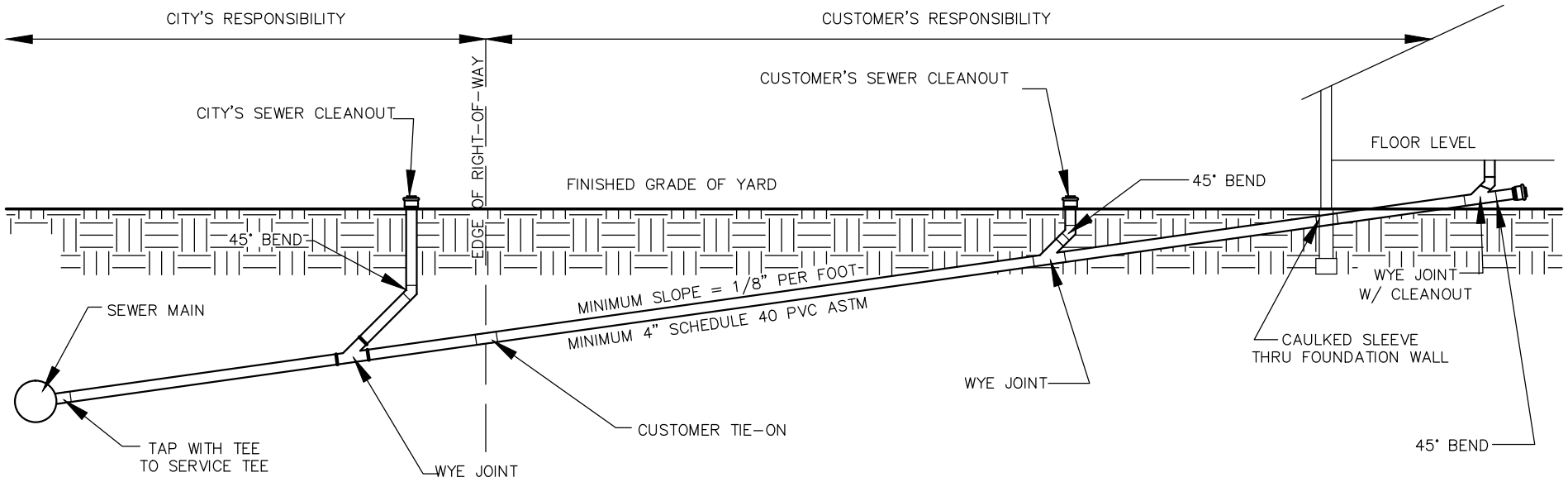

OBJECTIVE:
AS PROVIDED IN THE CITY OF LA VERGNE MUNICIPAL CODE AND THE SEWER USE ORDINANCE, NEW BUILDING SEWER PIPING REQUIRES INSPECTION AND TESTING PRIOR TO COMMENCEMENT OF SANITARY SEWER SERVICE. THIS POLICY ESTABLISHES LA VERGNE SEWER DEPARTMENT MINIMUM INSPECTION AND TESTING REQUIREMENTS TO SAFEGUARD HEALTH, PUBLIC WELFARE, AND PROTECTION OF PROPERTY.

REQUIREMENTS:
NEW SEWER SERVICE PIPING (BUILDING SEWER) SHALL BE WATER TESTED WITH NOT LESS THAN 10 FT HEAD OF WATER AND SHALL PROVE TIGHT. THE WATER SHALL BE KEPT IN THE SYSTEM FOR AT LEAST 15 MINUTES BEFORE INSPECTION STARTS AND UPON INSPECTION SHALL REMAIN AT CONSTANT ELEVATION FOR 15 MINUTES. ALTERNATIVELY, AN AIR TEST OF 5 PSI GAUGE PRESSURE CAN BE HELD FOR A PERIOD OF 15 MINUTES WITHOUT INTRODUCTION OF ADDITIONAL AIR.

INSPECTION SHALL BE CARRIED OUT ON THE PORTION OF SEWER PIPING FROM THE BUILDING TO THE POINT OF CONNECTION TO THE PUBLIC SANITARY SEWER.

INSPECTION AND TESTING OF UNDERGROUND PIPING SHALL BE MADE AFTER THE TRENCHES ARE EXCAVATED, PIPING IS INSTALLED, AND PRIOR TO ANY BACKFILL PUT INTO PLACE.

ADVANCE NOTICE OF AT LEAST 24 HOURS IS REQUIRED FOR INSPECTIONS AND RE-INSPECTIONS AND SHALL BE PREFORMED DURING NORMAL WORKING HOURS.

THE INSPECTION SHALL INCLUDE VISUAL REVIEW OF MATERIAL AND WORKMANSHIP TO ASSURE CODE CONFORMANCE.

A RECORD OF INSPECTION DETAILS SHALL BE KEPT BY THE LA VERGNE PUBLIC WORKS DEPARTMENT.

CTI ENGINEERS, INC.
3354 PERIMETER HILL DRIVE,
SUITE 140
NASHVILLE, TN 37211
615-834-8300

1.0

TYPICAL GRAVITY SEWER INSTALLATION

NOT TO SCALE

CITY OF LA VERGNE, TENNESSEE

STANDARD SEWER DETAILS

PUBLIC WORKS DEPARTMENT
148 INTERNATIONAL BLVD.
LA VERGNE, TN 37086
615-793-9891

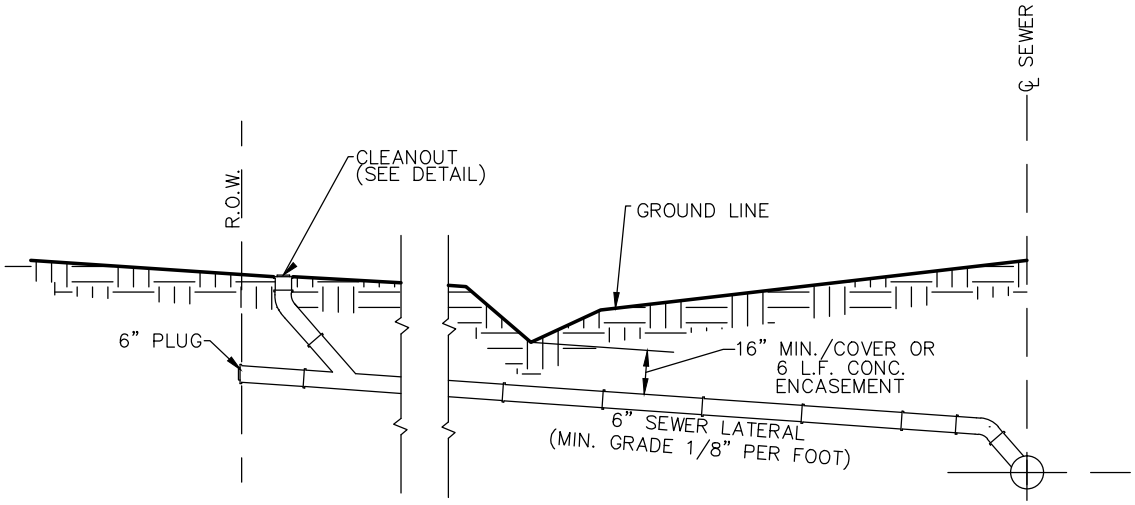

TEE BRANCH

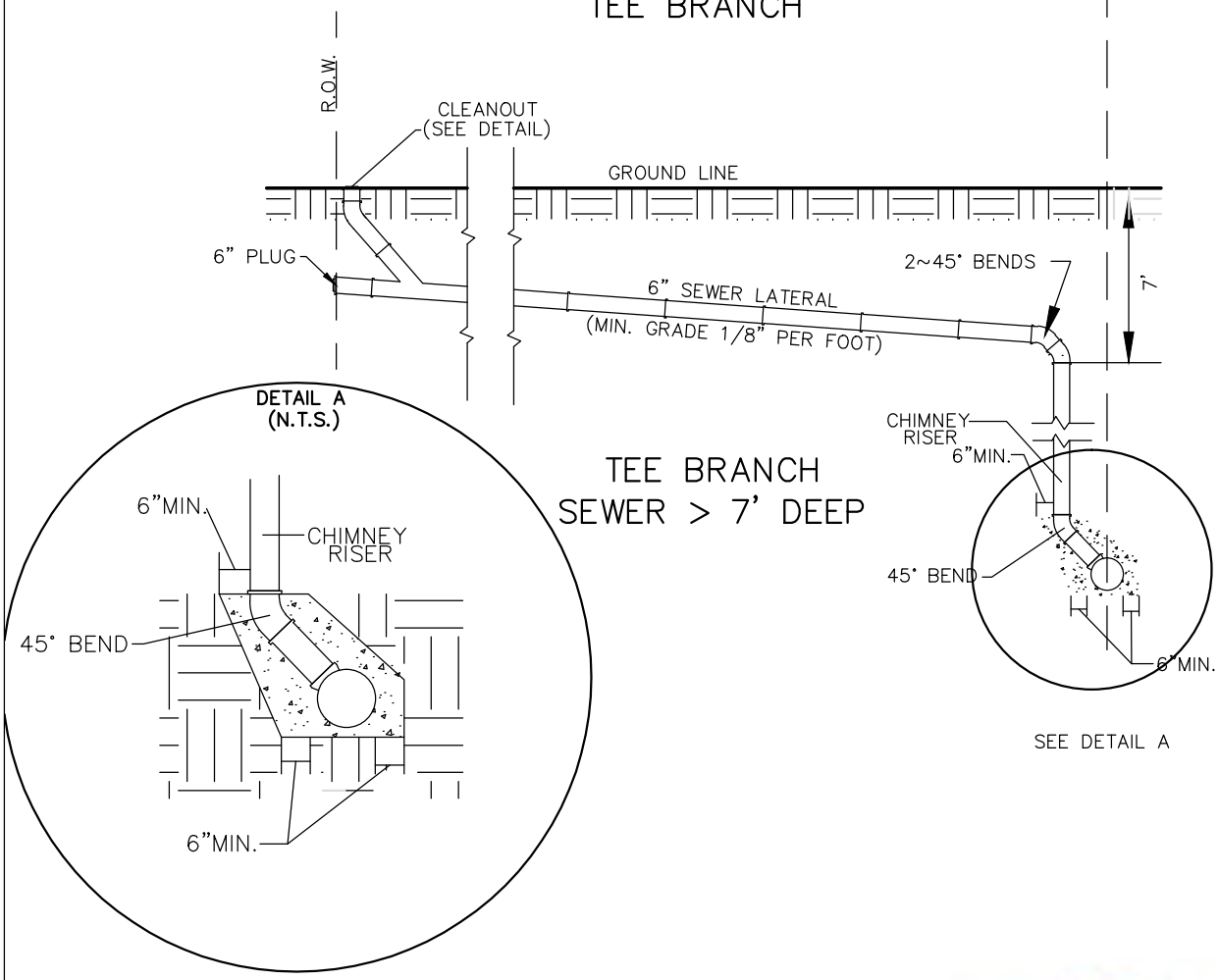

TEE BRANCH
SEWER > 7' DEEP

ENGINEERS, INC.

3354 PERIMETER HILL DRIVE, SUITE 140
NASHVILLE, TN 37211
615-834-8300

2.0

SANITARY SEWER LATERALS
NOT TO SCALE

CITY OF LA VERGNE, TENNESSEE

STANDARD SEWER DETAILS

PUBLIC WORKS DEPARTMENT
148 INTERNATIONAL BLVD.
LA VERGNE, TN 37086
615-793-9891

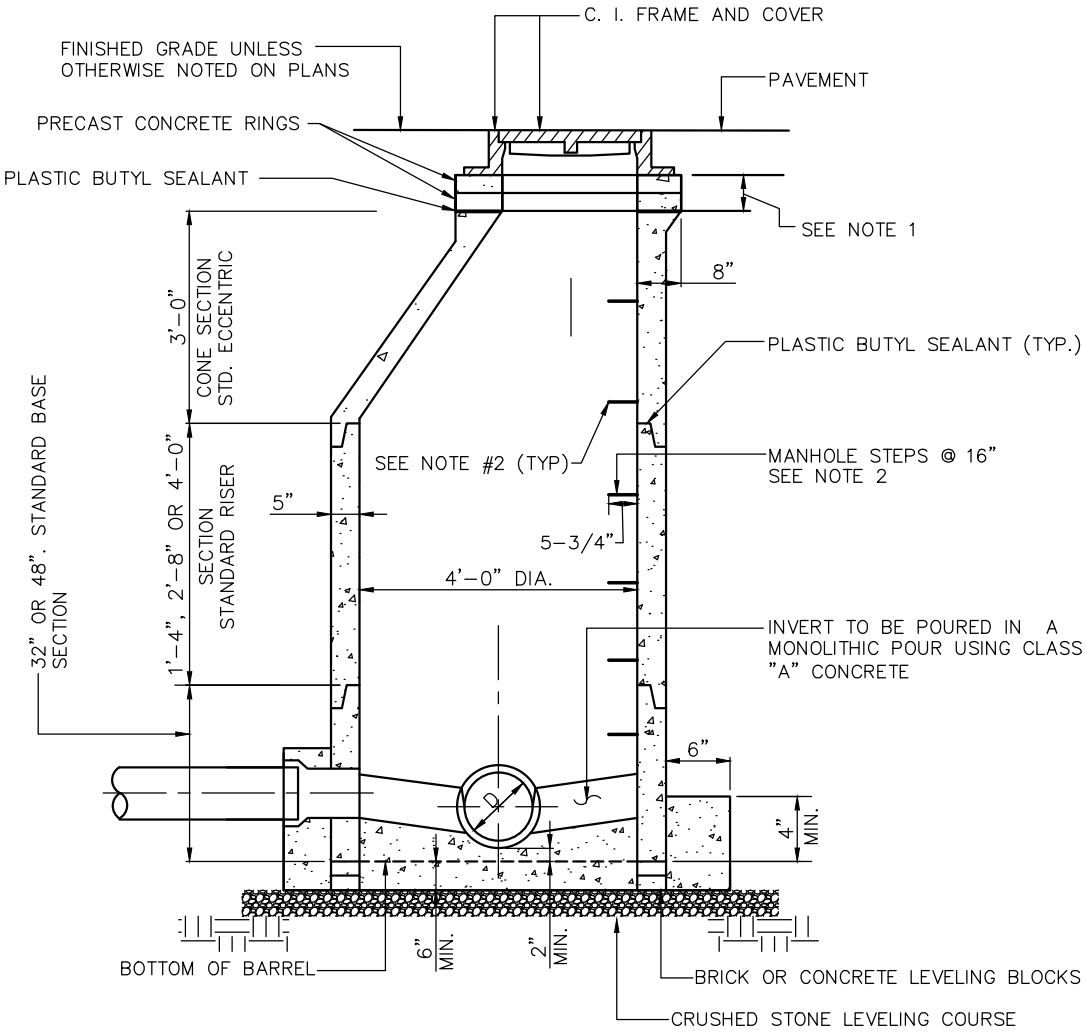

NOTE:

1. FOR BRINGING MANHOLE FRAME AND COVER TO GRADE, USE PRECAST CONCRETE OR CAST IRON RINGS.
2. 3/8 STEEL REINFORCED ROD ENCAPSULATED IN POLYPROPYLENE PLASTIC OR ALUMINUM ALLOY SEE SPECIFICATIONS.
3. RESILIENT CONNECTORS REQUIRED FOR ALL PIPES, REFER TO DETAIL AND SPECIFICATIONS.

CTI ENGINEERS, INC.
3354 PERIMETER HILL DRIVE, SUITE 140
NASHVILLE, TN 37211
615-834-8300

3.0

PRECAST CONCRETE MANHOLE

NOT TO SCALE

CITY OF LA VERGNE, TENNESSEE

STANDARD SEWER DETAILS

PUBLIC WORKS DEPARTMENT
148 INTERNATIONAL BLVD.
LA VERGNE, TN 37086
615-793-9891

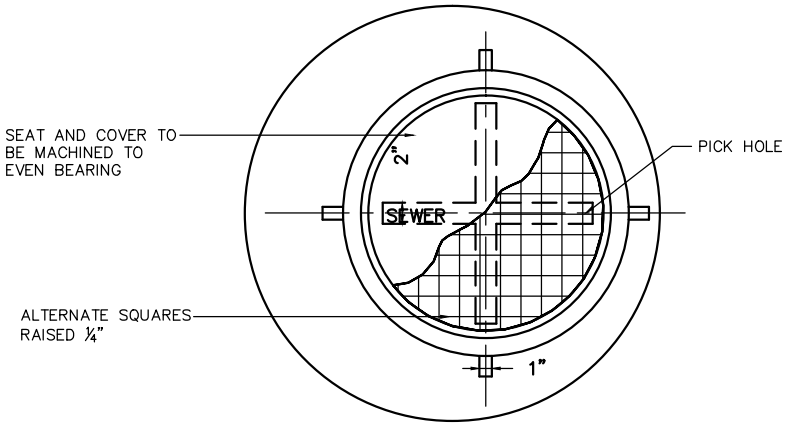

PLAN

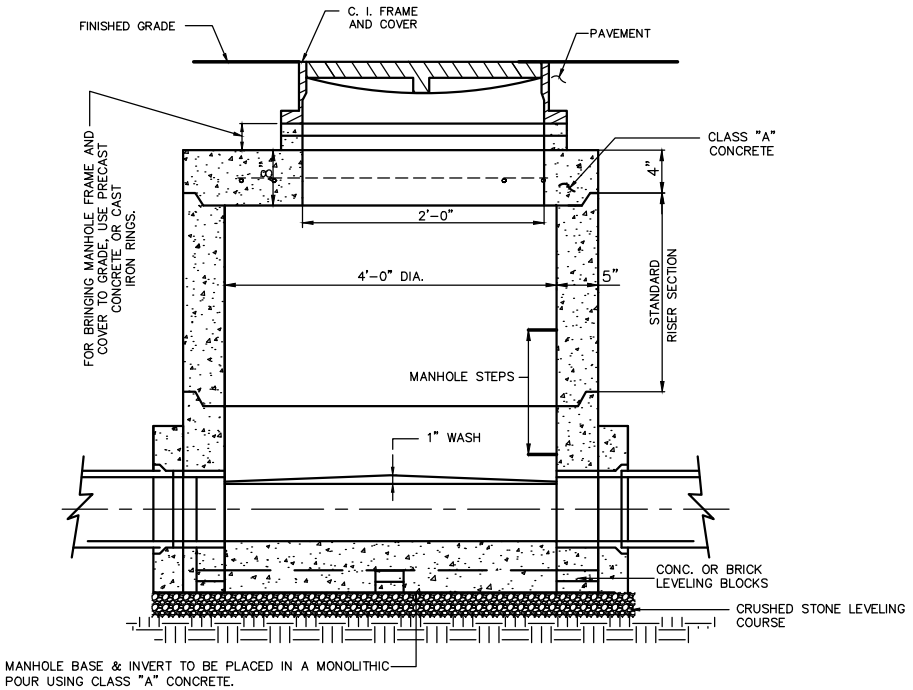

CTI ENGINEERS, INC.
3354 PERIMETER HILL DRIVE, SUITE 140
NASHVILLE, TN 37211
615-834-8300

4.0

STANDARD PRECAST MANHOLE FOR DEPTH OF LESS THAN 5'-0"

NOT TO SCALE

CITY OF LA VERGNE, TENNESSEE

STANDARD SEWER DETAILS

PUBLIC WORKS DEPARTMENT
148 INTERNATIONAL BLVD.
LA VERGNE, TN 37086
615-793-9891

D_1	D_2
8”	8”
10”	8”
12”	10”
15”	12”
18”	12”

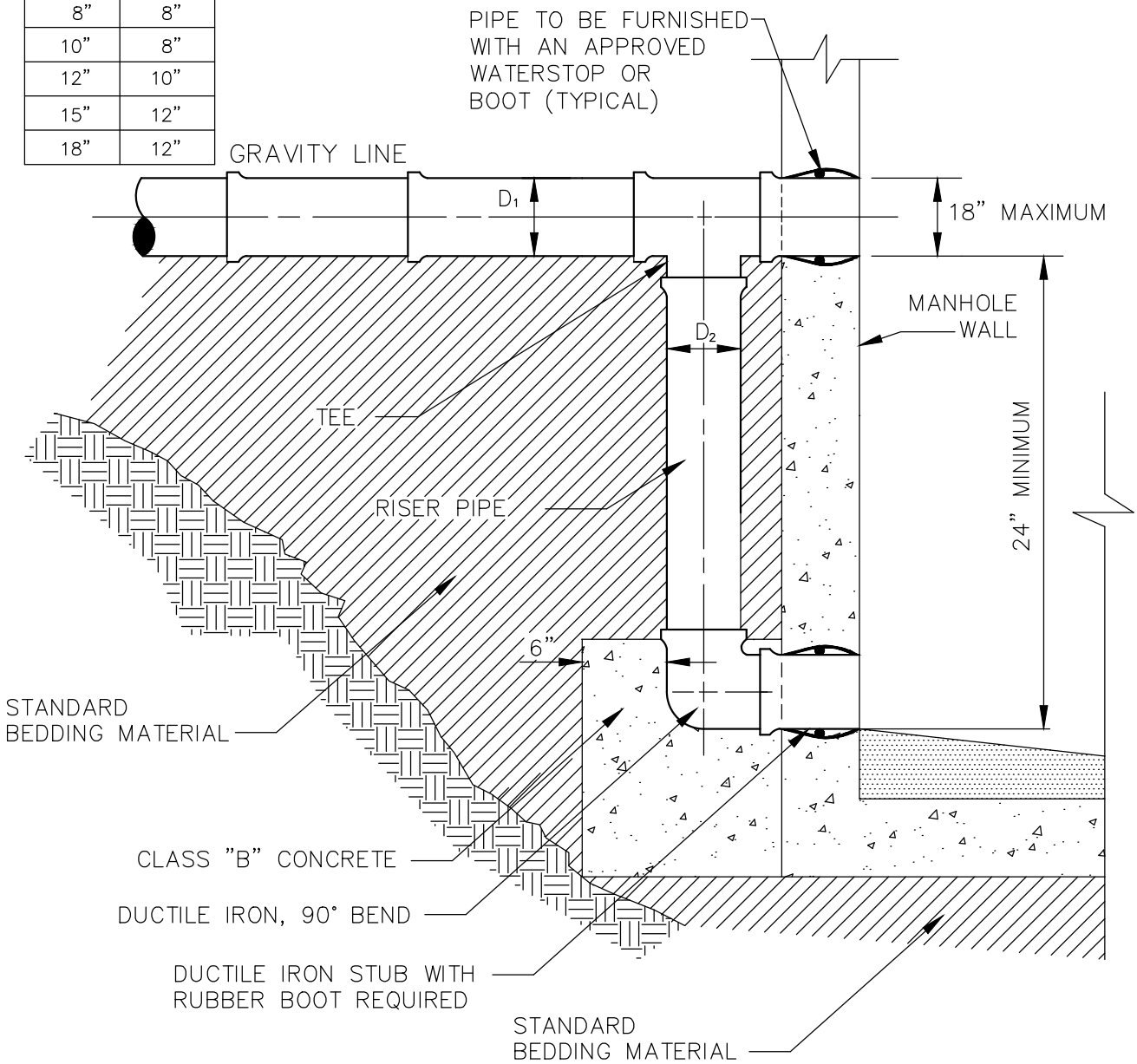

NOTES

1. SET INLET FROM DROP TO MATCH CROWNS WITH OUTLET EXCEPT THAT MINIMUM FALL ACROSS MANHOLE INVERT MUST BE 3”.
2. THE RISER PIPE SHALL BE CONSTRUCTED OF THE SAME MATERIAL AS THAT OF THE INCOMING LINE.

CTI ENGINEERS, INC.
3354 PERIMETER HILL DRIVE, SUITE 140
NASHVILLE, TN 37211
615-834-8300

5.0

PRECAST CONCRETE DROP MANHOLE

NOT TO SCALE

CITY OF LA VERGNE, TENNESSEE

STANDARD SEWER DETAILS

PUBLIC WORKS DEPARTMENT
148 INTERNATIONAL BLVD.
LA VERGNE, TN 37086
615-793-9891

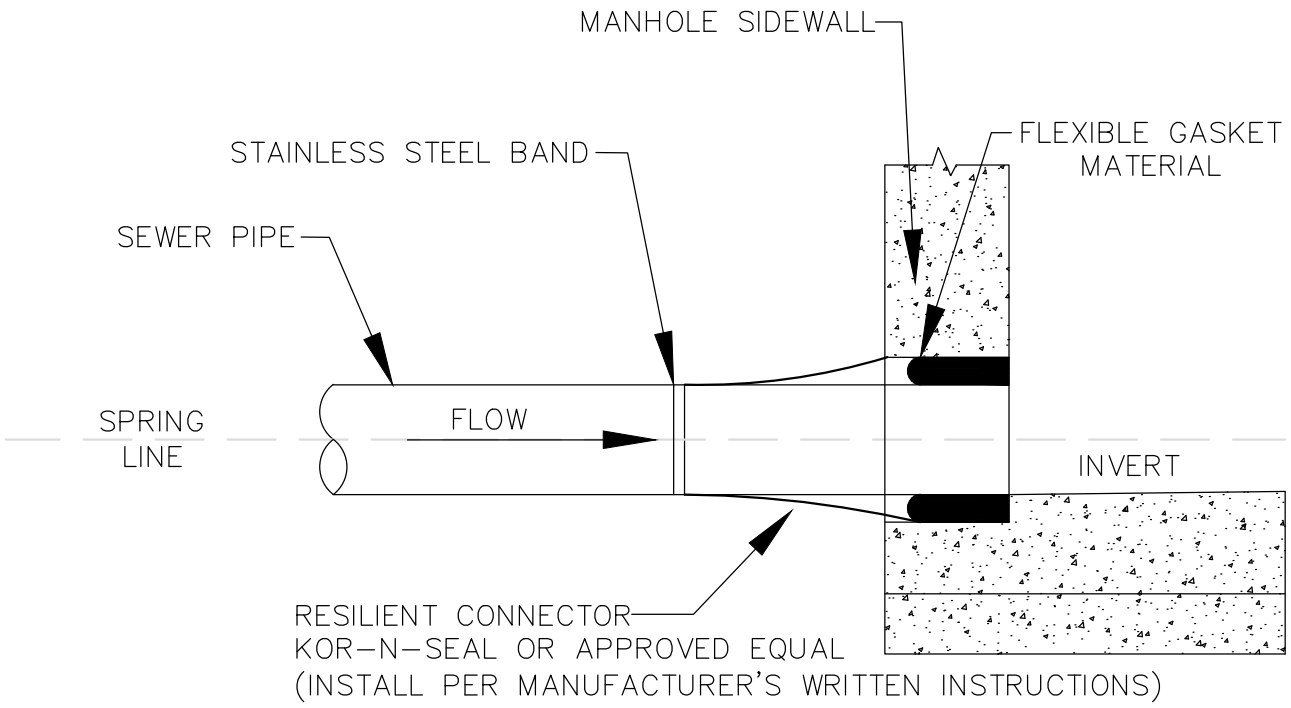

CTI ENGINEERS, INC.
3354 PERIMETER HILL DRIVE,
SUITE 140
NASHVILLE, TN 37211
615-834-8300

6.0

RESILIENT BOOT CONNECTION FOR SEWER PIPE TO MANHOLE DETAIL

NOT TO SCALE

CITY OF LA VERGNE, TENNESSEE

STANDARD SEWER DETAILS

PUBLIC WORKS DEPARTMENT
148 INTERNATIONAL BLVD.
LA VERGNE, TN 37086
615-793-9891

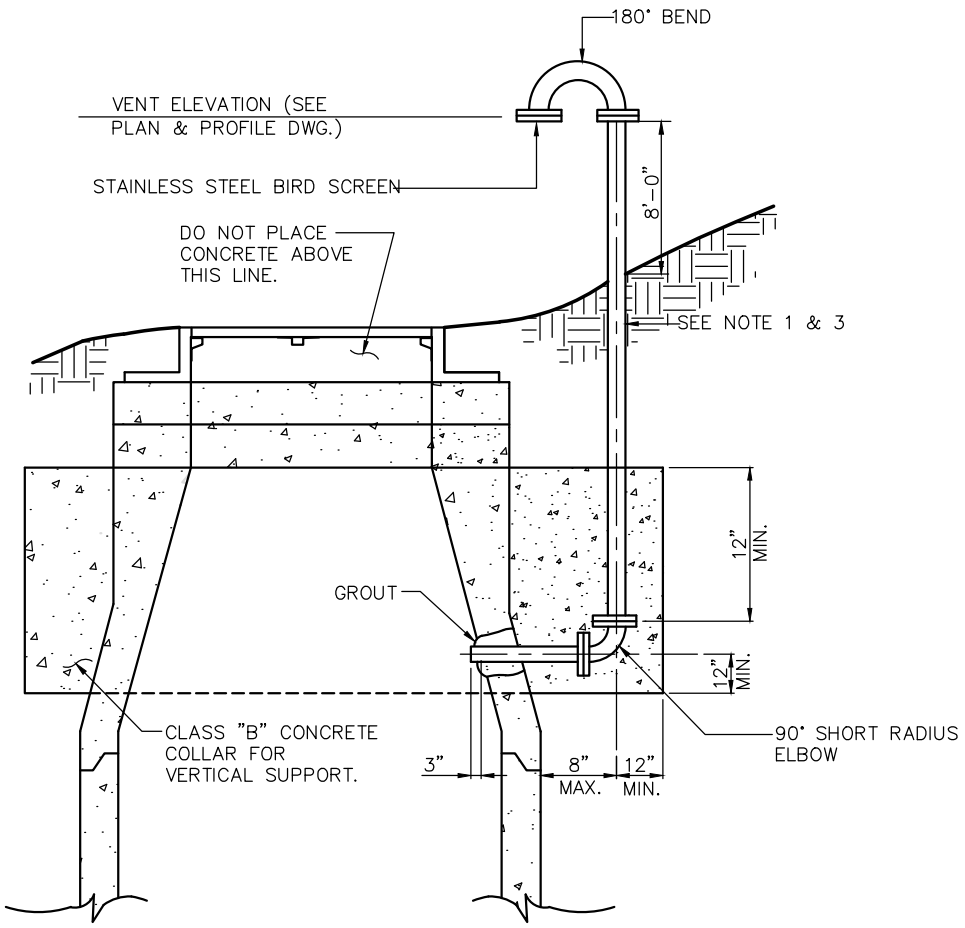

MANHOLE VENT NOTES:

1. ALL PIPING SHALL BE 3"ø DUCTILE IRON WITH FLANGED JOINTS COATED INSIDE AND OUT.
2. PAINT ALL EXPOSED PIPING WITH 2 COATS OF DARK GREEN COAL TAR EPOXY.
3. PROVIDE SUITABLE VENT PIPE SUPPORT.

CTI ENGINEERS, INC.
3354 PERIMETER HILL DRIVE, SUITE 140
NASHVILLE, TN 37211
615-834-8300

7.0

TYPICAL MANHOLE VENT
NOT TO SCALE

CITY OF LA VERGNE, TENNESSEE

STANDARD SEWER DETAILS

PUBLIC WORKS DEPARTMENT
148 INTERNATIONAL BLVD.
LA VERGNE, TN 37086
615-793-9891

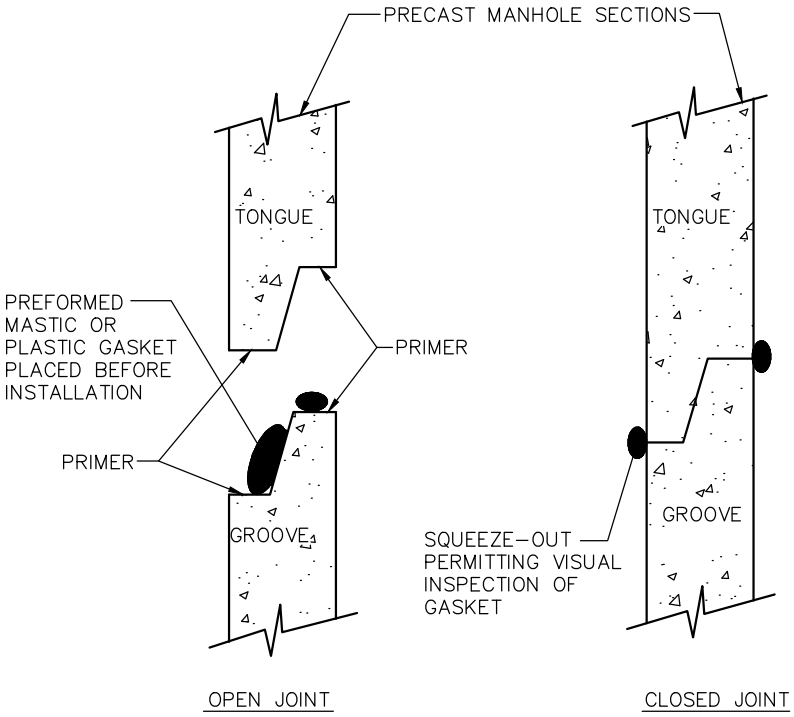

NOTES:

1. WHERE MASTIC DOES NOT PROTRUDE, EITHER INSIDE OR OUTSIDE, FINISH UP JOINT WITH GROUT.

2. WHERE MASTIC PROTRUDES ON INSIDE OF MANHOLE, TRIM FLUSH WITH CONCRETE.

CTI ENGINEERS, INC.
3354 PERIMETER HILL DRIVE, SUITE 140
NASHVILLE, TN 37211
615-834-8300

8.0 DETAIL OF MASTIC/PLASTIC GASKET FOR PRECAST MANHOLE SECTIONS

NOT TO SCALE

CITY OF LA VERGNE, TENNESSEE

STANDARD SEWER DETAILS

PUBLIC WORKS DEPARTMENT
148 INTERNATIONAL BLVD.
LA VERGNE, TN 37086
615-793-9891

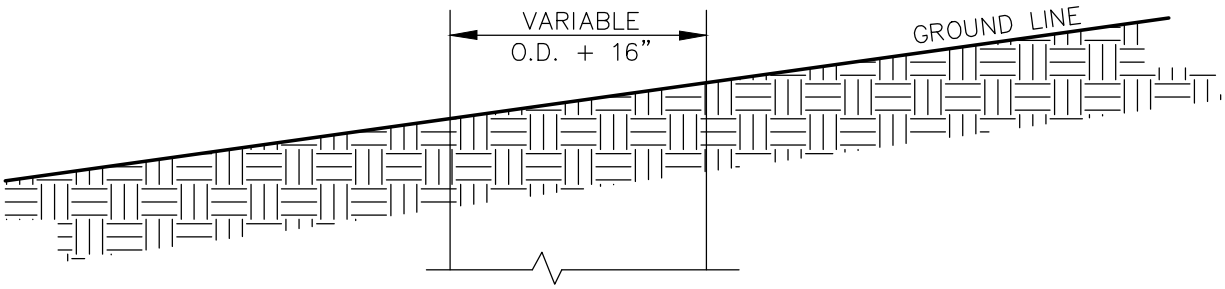

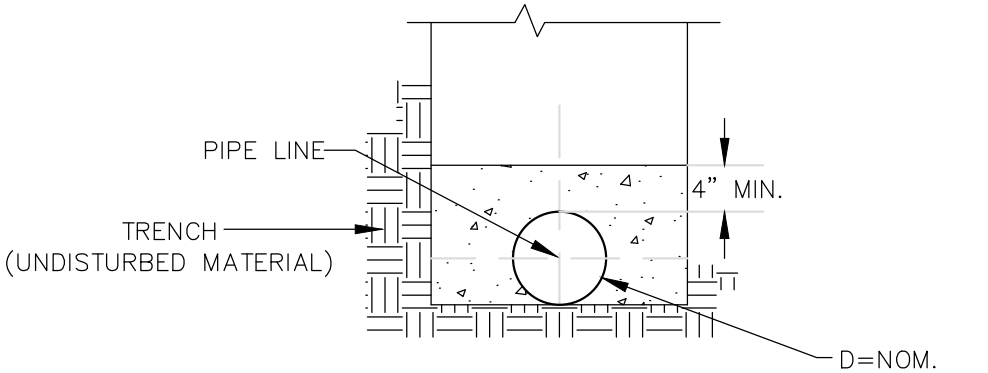

TYPICAL CONCRETE
PROTECTION FOR SEWER LINES

2000 P.S.I. CONCRETE TO BE POURED 16 HOURS BEFORE BACKFILL IS PLACED AND IN SUCH A MANNER AS TO PREVENT PIPE FROM FLOATING

CTI ENGINEERS, INC.
3354 PERIMETER HILL DRIVE,
SUITE 140
NASHVILLE, TN 37211
615-834-8300

9.0

CONCRETE PROTECTION
FOR SEWER LINES
NOT TO SCALE

CITY OF LA VERGNE, TENNESSEE

STANDARD SEWER DETAILS

PUBLIC WORKS DEPARTMENT
148 INTERNATIONAL BLVD.
LA VERGNE, TN 37086
615-793-9891

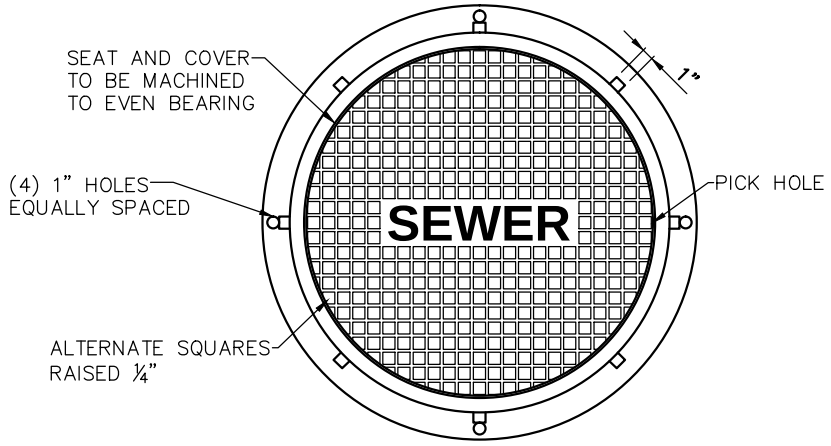

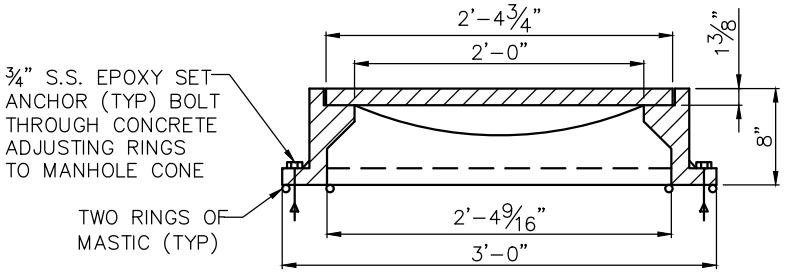

SPECIFIED MINIMUM WEIGHT
TOTAL 350 lbs.
LOAD RATING: HEAVY DUTY

STANDARD COVER & FRAME

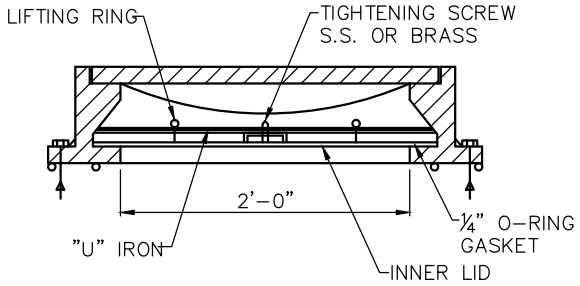

SPECIFIED MINIMUM WEIGHT
TOTAL 590 lbs.
LOAD RATING: HEAVY DUTY

WATERTIGHT COVER & FRAME

STANDARD FRAME AND COVER TO BE ACHESON FOUNDRY
#A-2024-81S, OR EQUAL WATER TIGHT MANHOLE FRAME AND COVER
TO BE ACHESON FOUNDRY #A-2624-71S OR EQUAL

CTI ENGINEERS, INC.
3354 PERIMETER HILL DRIVE,
SUITE 140
NASHVILLE, TN 37211
615-834-8300

10.0
MANHOLE FRAME AND COVER
NOT TO SCALE

CITY OF LA VERGNE, TENNESSEE

STANDARD SEWER DETAILS

PUBLIC WORKS DEPARTMENT
148 INTERNATIONAL BLVD.
LA VERGNE, TN 37086
615-793-9891

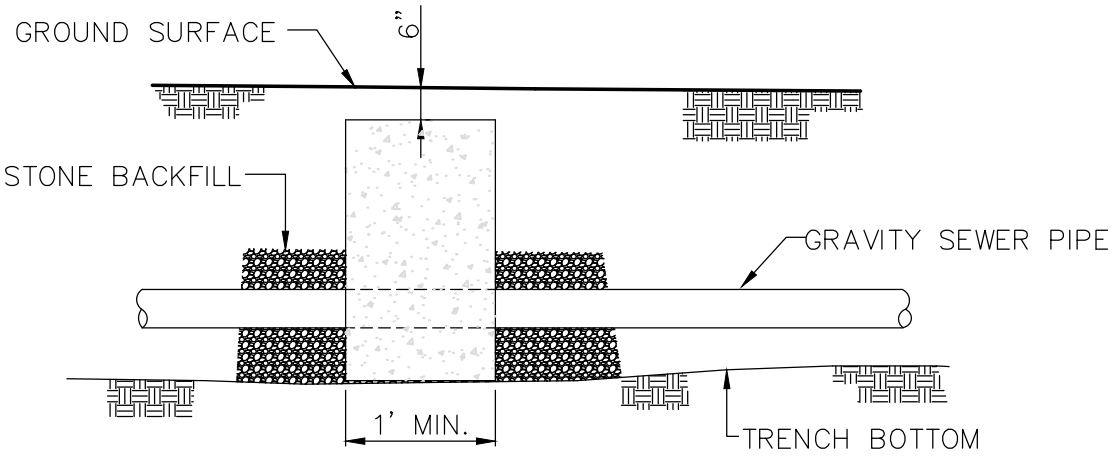

EMBED SEWER PIPE IN CLASS "B" CONCRETE FROM BOTTOM OF TRENCH TO WITHIN 6-INCHES OF GROUND SURFACE, UNLESS SHOWN OTHERWISE ON PROFILE. CONCRETE SHALL BE KEYED INTO THE TRENCH WALLS AT LEAST TWO FEET.

CTI ENGINEERS, INC.
3354 PERIMETER HILL DRIVE,
SUITE 140
NASHVILLE, TN 37211
615-834-8300

11.0
CONCRETE CHECK DAM
NOT TO SCALE

CITY OF LA VERGNE, TENNESSEE

STANDARD SEWER DETAILS

PUBLIC WORKS DEPARTMENT
148 INTERNATIONAL BLVD.
LA VERGNE, TN 37086
615-793-9891

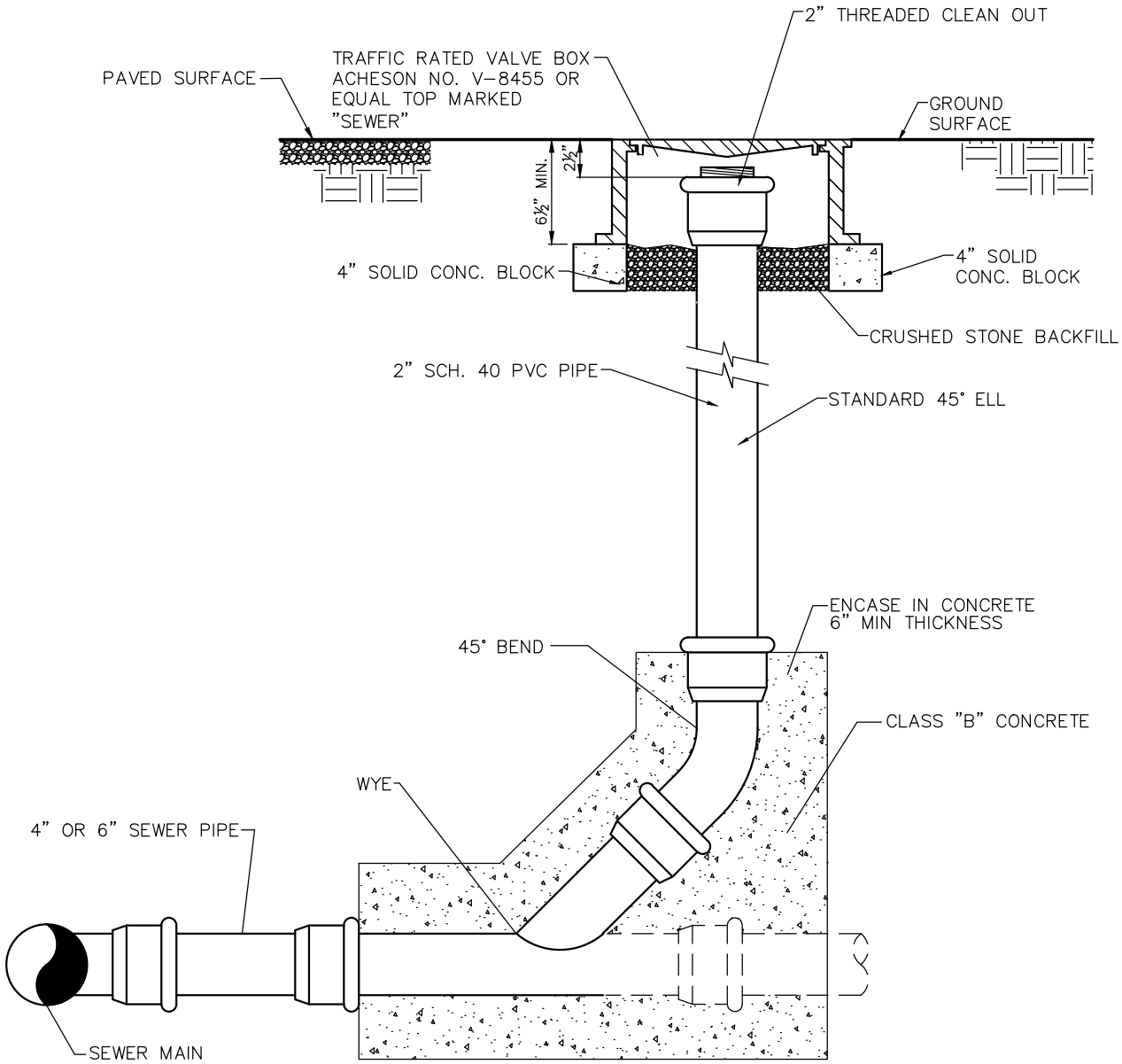

CTI ENGINEERS, INC.
3354 PERIMETER HILL DRIVE,
SUITE 140
NASHVILLE, TN 37211
615-834-8300

12.0
CLEAN OUT WITH TRAFFIC BOX
NOT TO SCALE

CITY OF LA VERGNE, TENNESSEE

STANDARD SEWER DETAILS

PUBLIC WORKS DEPARTMENT
148 INTERNATIONAL BLVD.
LA VERGNE, TN 37086
615-793-9891

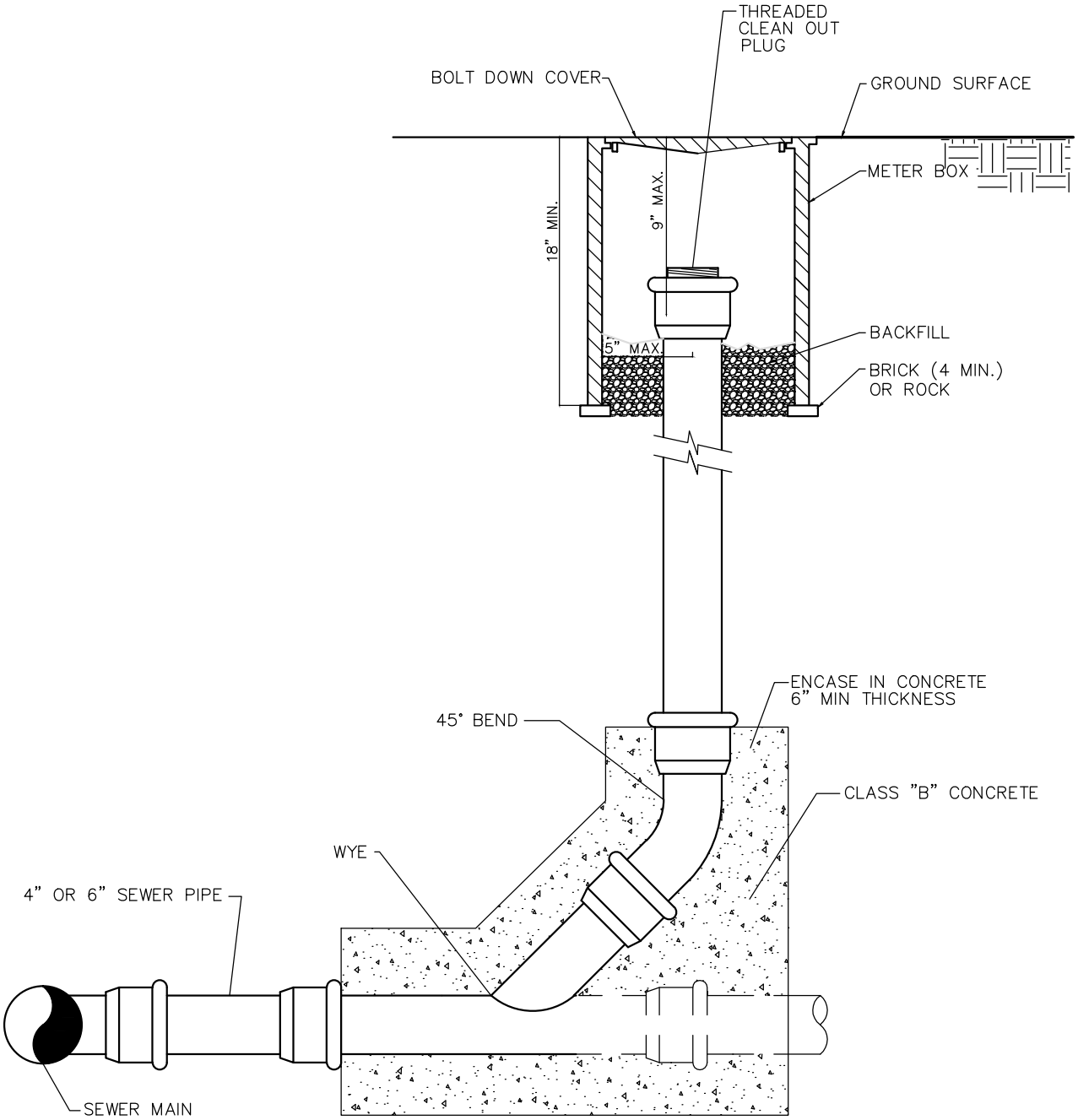

CTI ENGINEERS, INC.
3354 PERIMETER HILL DRIVE, SUITE 140
NASHVILLE, TN 37211
615-834-8300

13.0

CLEAN OUT WITH NON-TRAFFIC BOX

NOT TO SCALE

CITY OF LA VERGNE, TENNESSEE

STANDARD SEWER DETAILS

PUBLIC WORKS DEPARTMENT
148 INTERNATIONAL BLVD.
LA VERGNE, TN 37086
615-793-9891

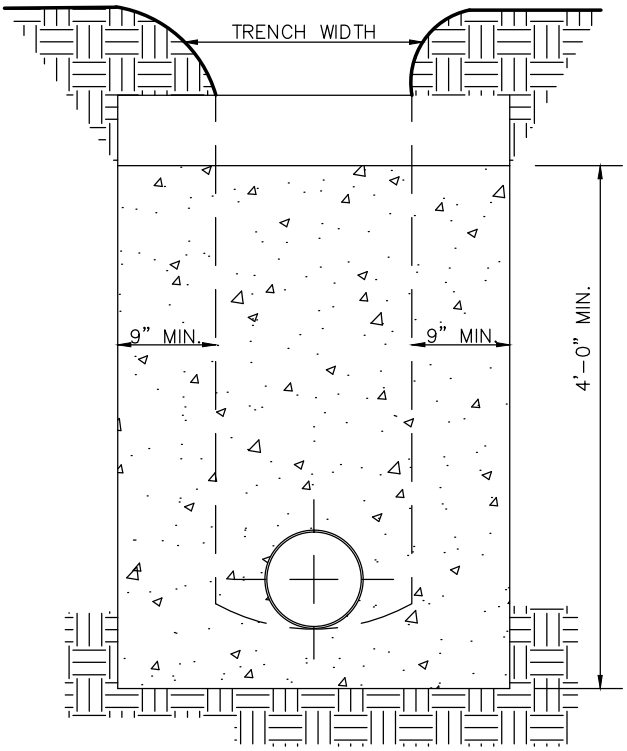

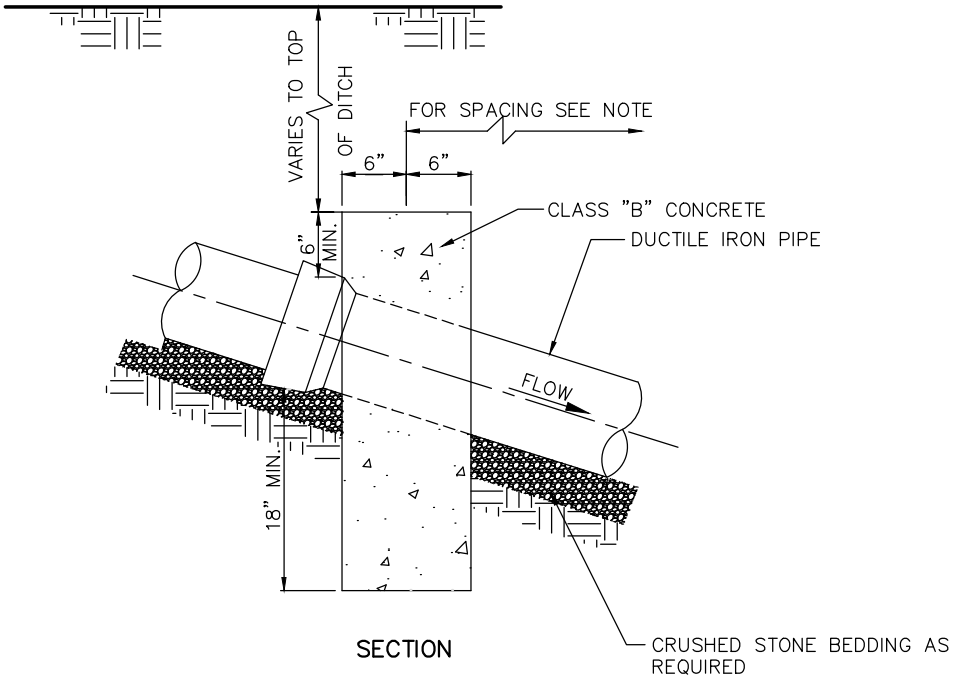

SECTION

NOTES:
1. SEWERS ON 18.8% SLOPE OR GREATER SHALL BE ANCHORED SECURELY WITH CONCRETE ANCHORS EQUAL SPACED. REFER TO SPECIFICATIONS.

CTI ENGINEERS, INC.
3354 PERIMETER HILL DRIVE,
SUITE 140
NASHVILLE, TN 37211
615-834-8300

14.0
CONCRETE ANCHOR
NOT TO SCALE

CITY OF LA VERGNE, TENNESSEE

STANDARD SEWER DETAILS

PUBLIC WORKS DEPARTMENT
148 INTERNATIONAL BLVD.
LA VERGNE, TN 37086
615-793-9891

*BACKFILL TRENCH TO SUBGRADE WITH STONE UNDER EXISTING AND PROPOSED PAVEMENT AREAS.

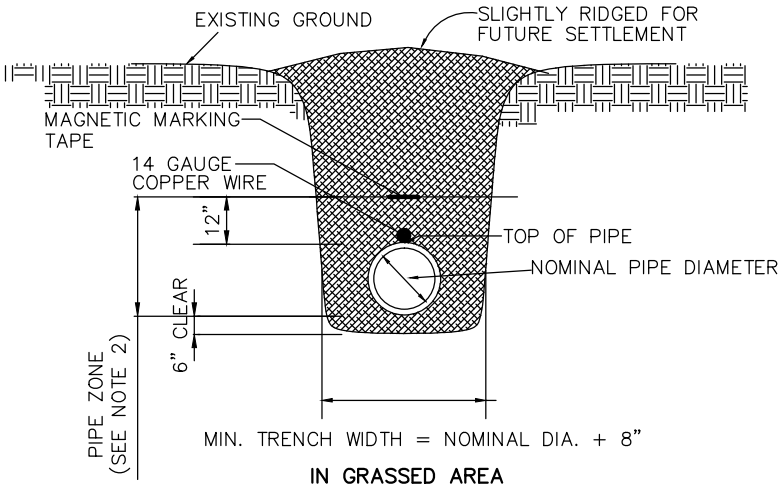

IN GRASSED AREA

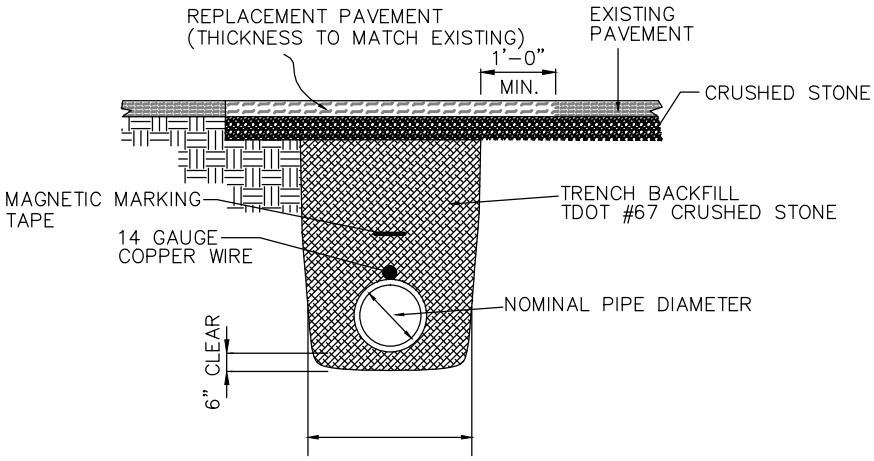

IN PAVED AREA

NOTES:

1. SEE STANDARD SPECIFICATIONS FOR FULL BACKFILL REQUIREMENTS.
2. "PIPE ZONE" EXTENDS TO 12" ABOVE TOP OF PIPE AND IS AREA IN WHICH SPECIAL CARE IS TO BE GIVEN TO PLACEMENT AND COMPACTION TO PROTECT PIPE DURING AND AFTER LAYING.
3. LIMIT TRENCH WIDTH AT TOP OF PIPE TO NOMINAL PIPE DIAMETER PLUS 16" UNLESS PERMITTED OTHERWISE BY ENGINEER.
4. TRENCH SHALL BE DUG TO GIVE PIPE FULL AND CONTINUOUS SUPPORT. ALL ROCK TO BE REMOVED WITHIN 6" OF PIPE – BED TO PIPE GRADE WITH CRUSHED STONE BEDDING.
5. PIPE TO BE CONTINUOUSLY SUPPORTED ALONG LENGTH OF PIPE BARREL EXCEPT AT BELL. BELL HOLES ARE REQUIRED SUCH THAT NO BEARING LOAD IS TAKEN BY THE BELL.
6. MAGNETIC MARKING TAPE AND 14 GAUGE COPPER WIRE REQUIRED FOR ALL SEWER.

CTI ENGINEERS, INC.
3354 PERIMETER HILL DRIVE, SUITE 140
NASHVILLE, TN 37211
615-834-8300

15.0
TYPICAL TRENCH BACKFILL
NOT TO SCALE

CITY OF LA VERGNE, TENNESSEE

STANDARD SEWER DETAILS

PUBLIC WORKS DEPARTMENT
148 INTERNATIONAL BLVD.
LA VERGNE, TN 37086
615-793-9891

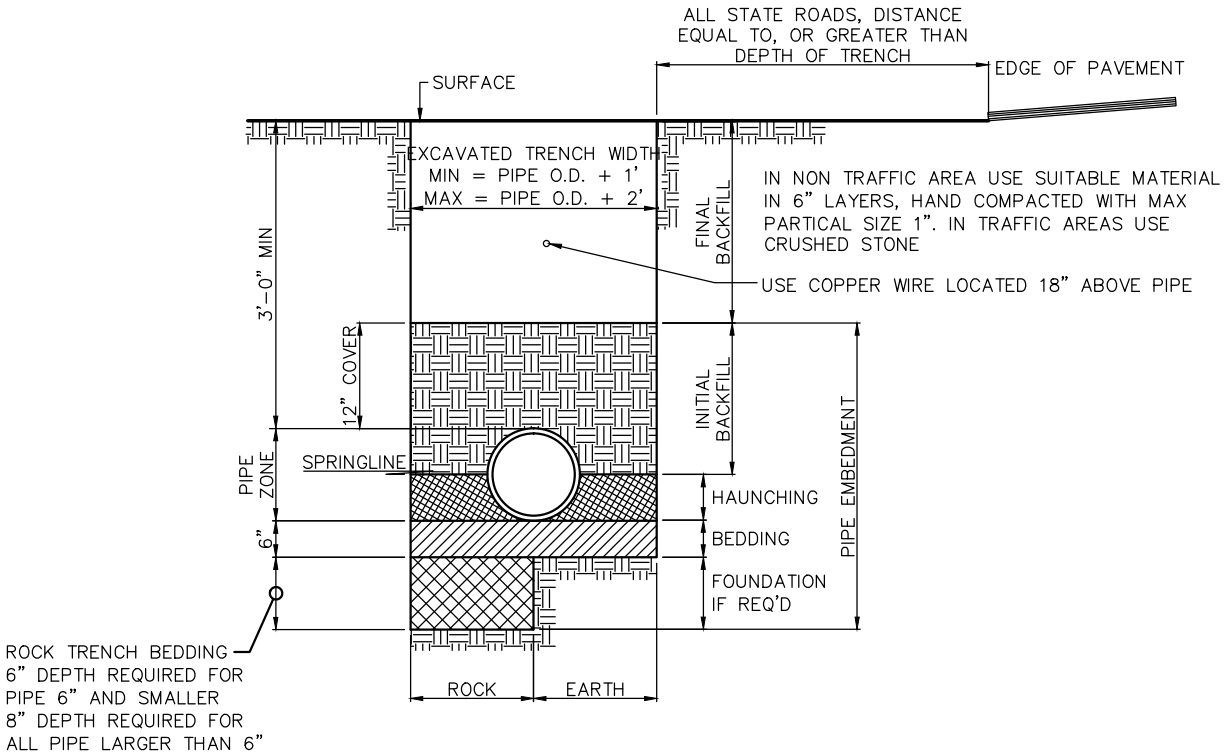

CTI ENGINEERS, INC.

3354 PERIMETER HILL DRIVE,
SUITE 140
NASHVILLE, TN 37211
615-834-8300

16.0

PVC PIPE INSTALLATION DETAIL

NOT TO SCALE

CITY OF LA VERGNE, TENNESSEE

STANDARD SEWER DETAILS

PUBLIC WORKS DEPARTMENT
148 INTERNATIONAL BLVD.
LA VERGNE, TN 37086
615-793-9891

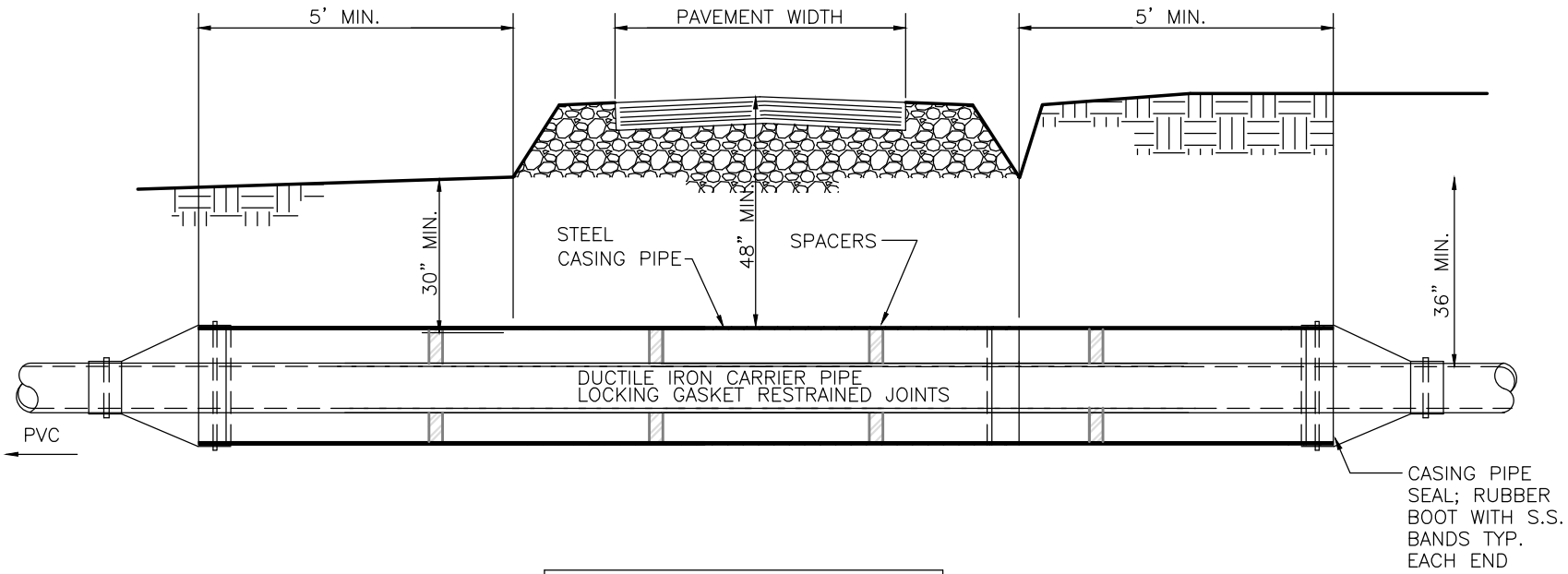

TABLE A		
	WELDED STEEL CASING	
CARRIER SIZE	CASING SIZE	WALL THICKNESS OF CASING PIPE
2"	6"	1/4 "
3"	8"	1/4 "
4"	12"	1/4 "
6"	12"	1/4 "
8"	16"	1/4 "

CTI ENGINEERS, INC.
3354 PERIMETER HILL DRIVE, SUITE 140
NASHVILLE, TN 37211
615-834-8300

17.0

TYPICAL GRAVITY SEWER INSTALLATION
NOT TO SCALE

CITY OF LA VERGNE, TENNESSEE

STANDARD SEWER DETAILS

PUBLIC WORKS DEPARTMENT
148 INTERNATIONAL BLVD.
LA VERGNE, TN 37086
615-793-9891

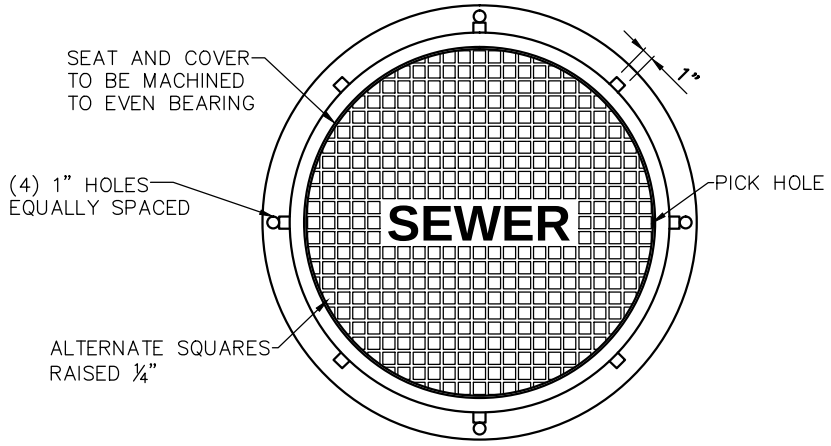

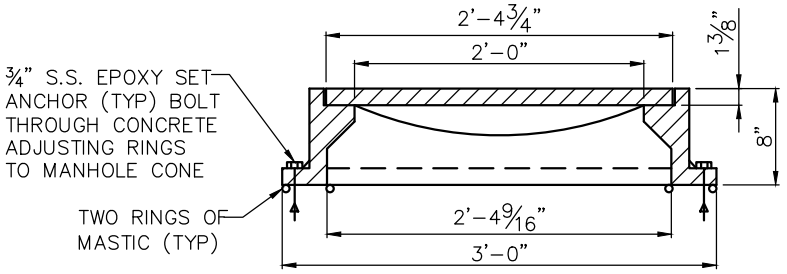

SPECIFIED MINIMUM WEIGHT
TOTAL 350 lbs.
LOAD RATING: HEAVY DUTY

STANDARD COVER & FRAME

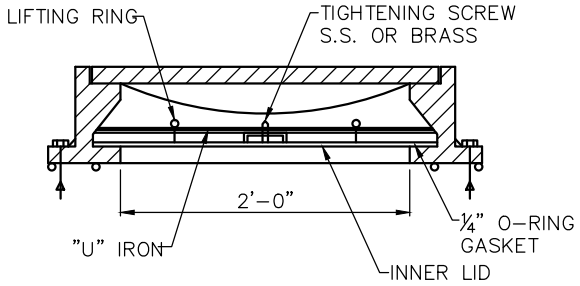

SPECIFIED MINIMUM WEIGHT
TOTAL 590 lbs.
LOAD RATING: HEAVY DUTY

WATERTIGHT COVER & FRAME

STANDARD FRAME AND COVER TO BE ACHESON FOUNDRY
#A-2024-81S, OR EQUAL WATER TIGHT MANHOLE FRAME AND COVER
TO BE ACHESON FOUNDRY #A-2624-71S OR EQUAL

CTI ENGINEERS, INC.
3354 PERIMETER HILL DRIVE,
SUITE 140
NASHVILLE, TN 37211
615-834-8300

10.0
MANHOLE FRAME AND COVER
NOT TO SCALE

CITY OF LA VERGNE, TENNESSEE

STANDARD SEWER DETAILS

PUBLIC WORKS DEPARTMENT
148 INTERNATIONAL BLVD.
LA VERGNE, TN 37086
615-793-9891

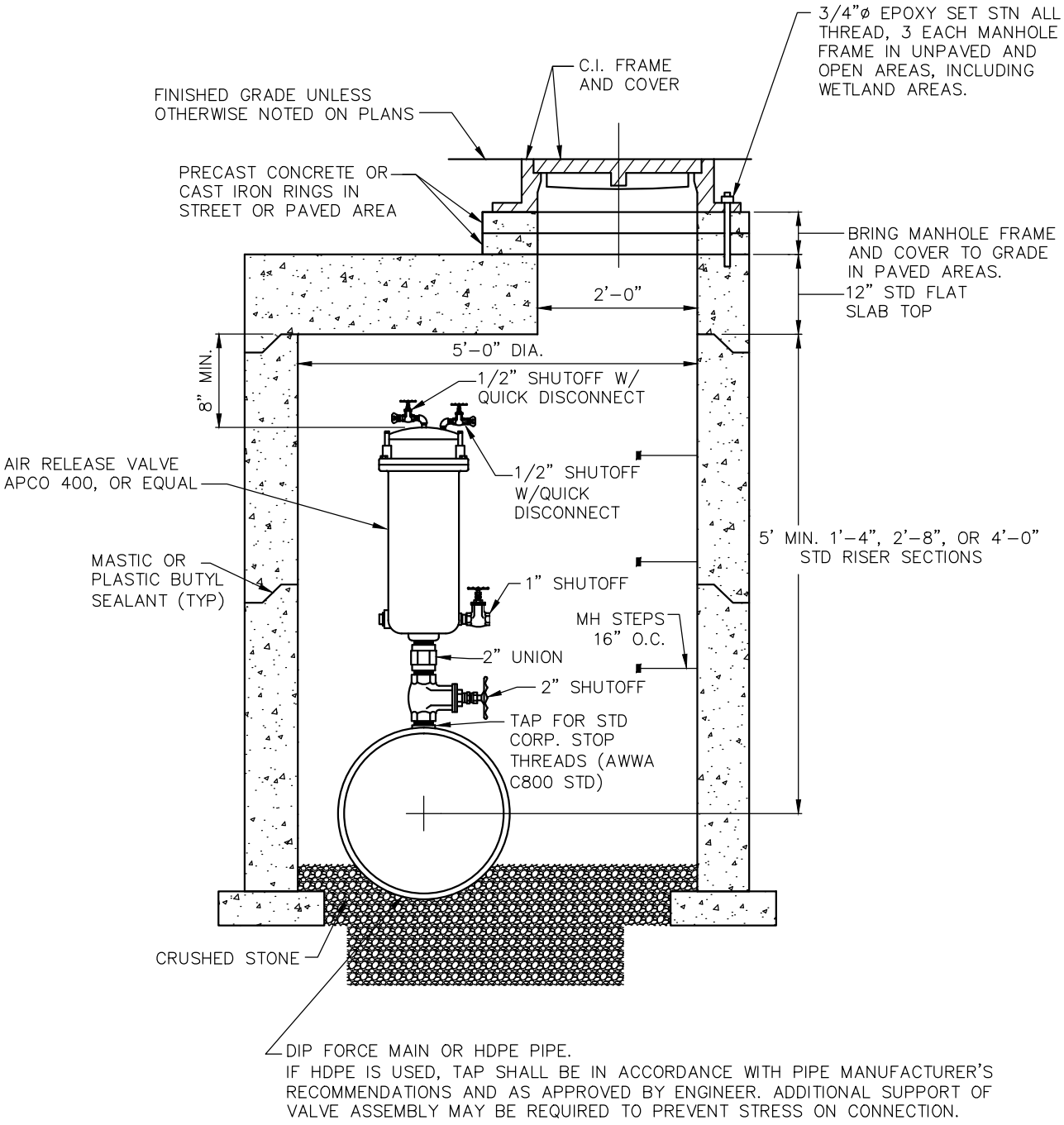

NOTE: IN WETLAND AREAS, EXTEND TOP OF MH COVER A MIN. OF 1 FT. AND A MAX. OF 2 FT. ABOVE ORIGINAL GRADE.

CTI ENGINEERS, INC.
3354 PERIMETER HILL DRIVE, SUITE 140
NASHVILLE, TN 37211
615-834-8300

18.0

SEWAGE AIR RELEASE VALVE

NOT TO SCALE

CITY OF LA VERGNE, TENNESSEE

STANDARD SEWER DETAILS

PUBLIC WORKS DEPARTMENT
148 INTERNATIONAL BLVD.
LA VERGNE, TN 37086
615-793-9891

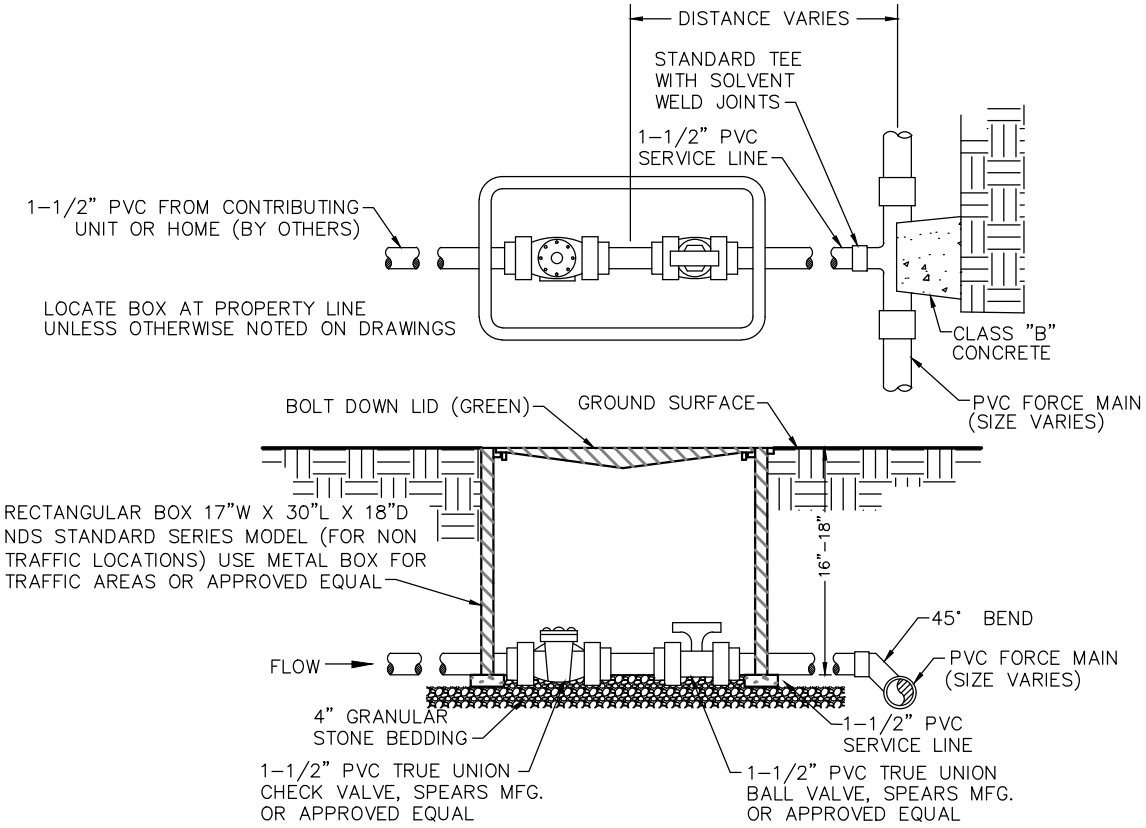

CTI ENGINEERS, INC.
3354 PERIMETER HILL DRIVE, SUITE 140
NASHVILLE, TN 37211
615-834-8300

19.0

TYPICAL PRESSURE SEWER SERVICE LINE CONNECTION

NOT TO SCALE

CITY OF LA VERGNE, TENNESSEE

STANDARD SEWER DETAILS

PUBLIC WORKS DEPARTMENT
148 INTERNATIONAL BLVD.
LA VERGNE, TN 37086
615-793-9891

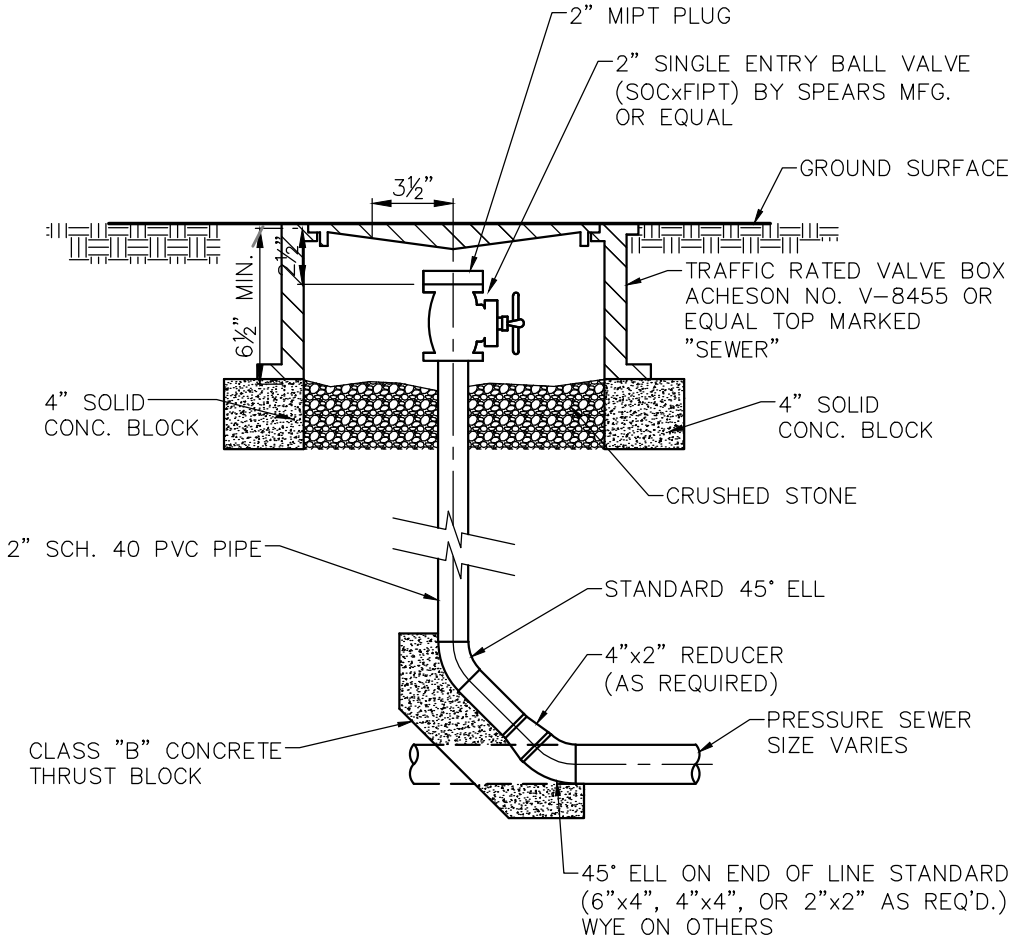

CTI ENGINEERS, INC.
3354 PERIMETER HILL DRIVE, SUITE 140
NASHVILLE, TN 37211
615-834-8300

20.0

PRESSURE SEWER CLEAN OUT WITH TRAFFIC BOX

NOT TO SCALE

CITY OF LA VERGNE, TENNESSEE

STANDARD SEWER DETAILS

PUBLIC WORKS DEPARTMENT
148 INTERNATIONAL BLVD.
LA VERGNE, TN 37086
615-793-9891

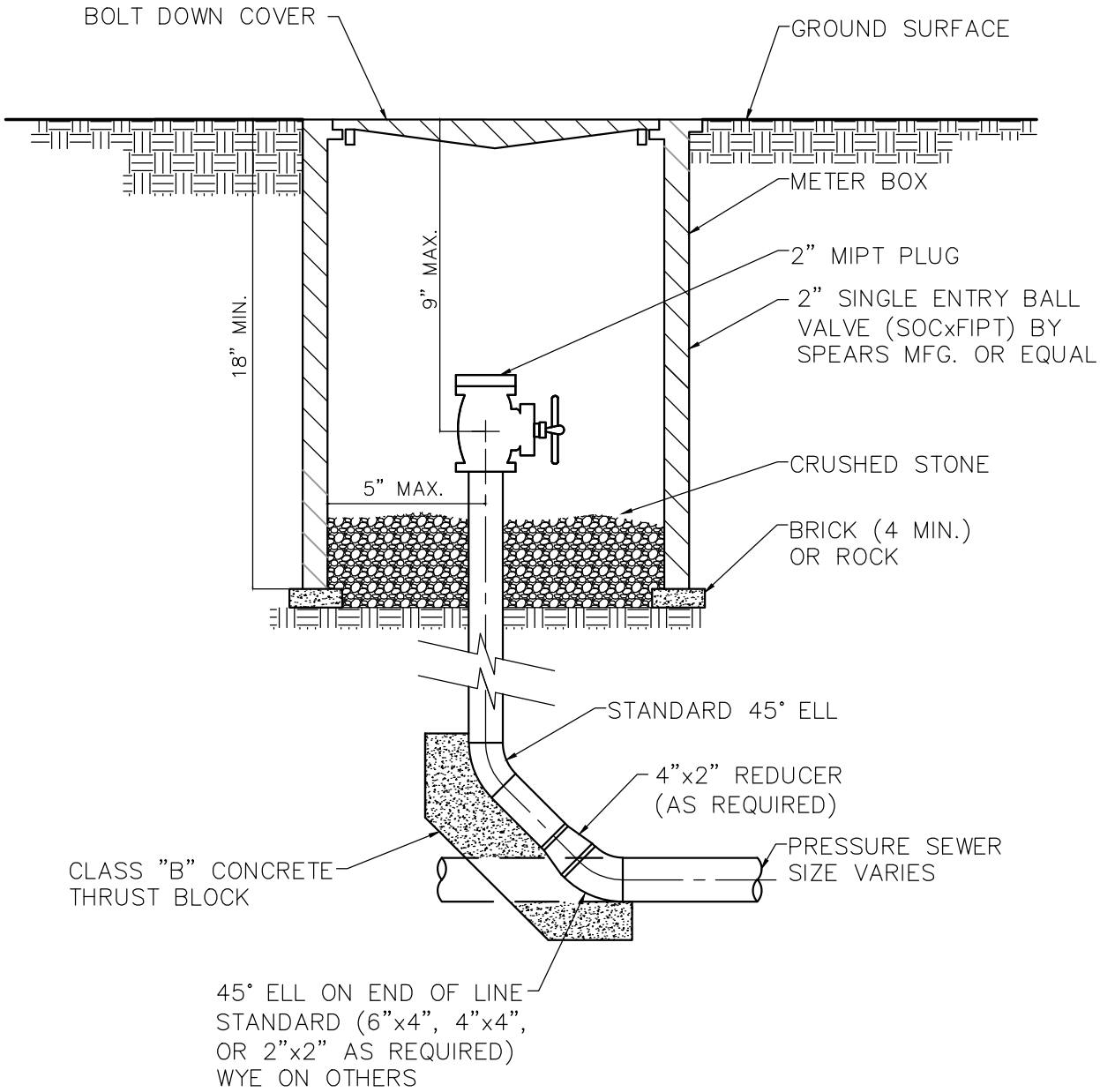

CTI ENGINEERS, INC.
3354 PERIMETER HILL DRIVE, SUITE 140
NASHVILLE, TN 37211
615-834-8300

21.0

PRESSURE SEWER CLEAN OUT
NON-TRAFFIC BOX
NOT TO SCALE

CITY OF LA VERGNE, TENNESSEE

STANDARD SEWER DETAILS

PUBLIC WORKS DEPARTMENT
148 INTERNATIONAL BLVD.
LA VERGNE, TN 37086
615-793-9891